ITEM	DRAWING No	DESCRIPTION	QTY.	MASS (kg)
1	3996-60-25	170 DIA PIPE FLANGE	2	2
2	OEM-32-TN-MS	32NB BLACK STEEL TOE NIPPLE MALE BSP THREAD	1	0

DIMENSIONS IN MILLIMETRES

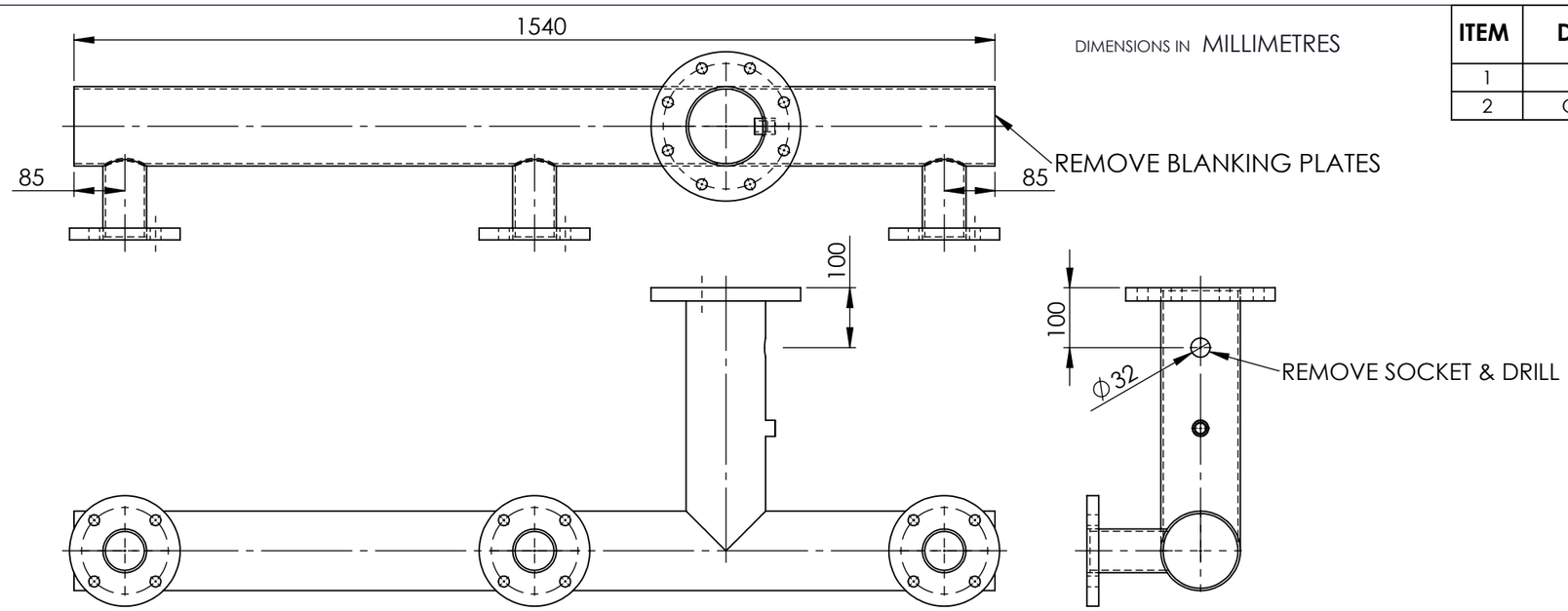

ORIGINAL MANIFOLD

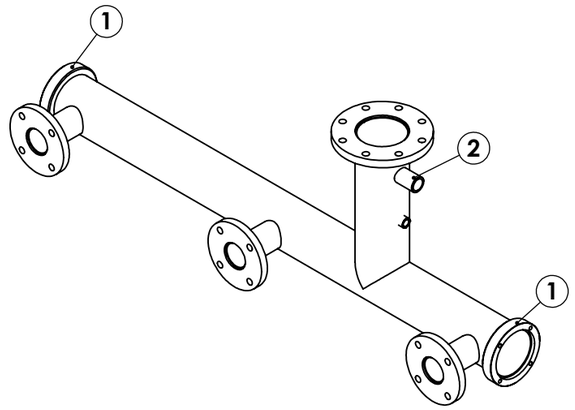

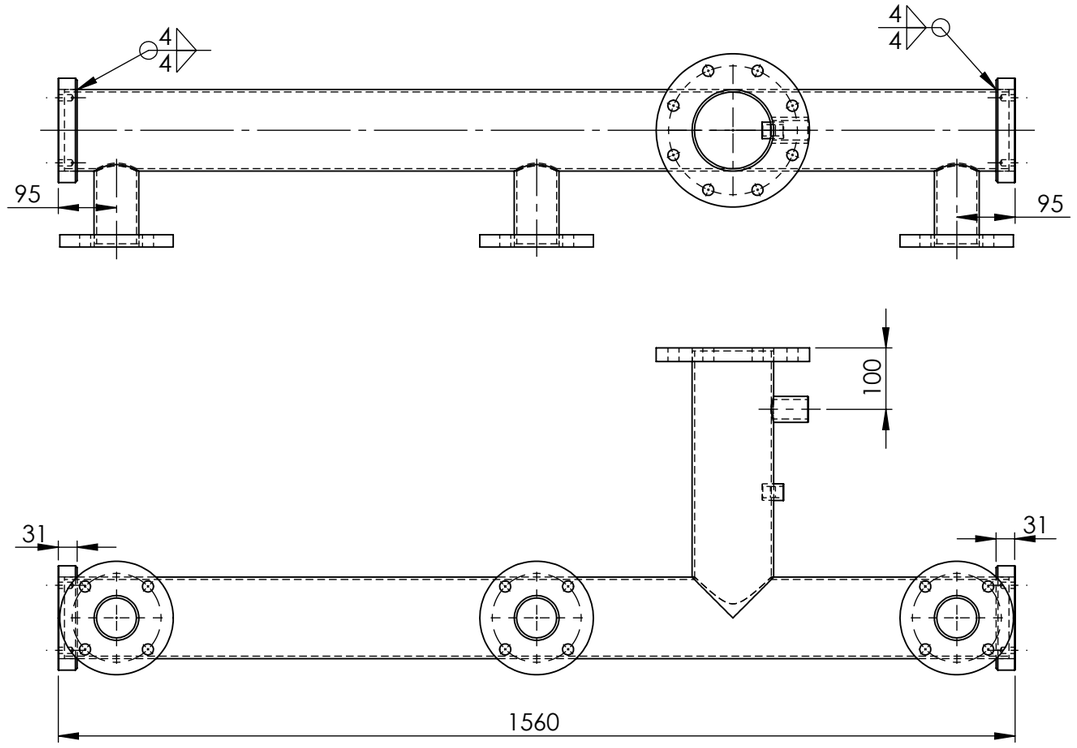

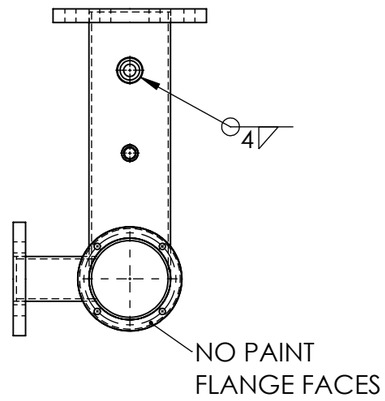

ALL WELDS - 4CFW UNLESS NOTED OTHERWISE
FINISH - ENAMEL PAINT TO MATCH EXISTING
NO PAINT ON FLANGE FACES or
THREAD ON TOE NIPPLE

UNLESS OTHERWISE SPECIFIED: TOLERANCES: MACHINE + / - 0.25mm FABRICATION + / - 1.0 mm

DIMENSIONS IN MILLIMETRES

THIS DRAWING IS THE PROPERTY OF MECHANICAL ENGINEERING & CAD SERVICES (MECS) Pty Ltd & MUST NOT BE MANUFACTURED FROM,COPIED OR TRANSMITTED TO A THIRD PARTY WITHOUT THE PRIOR APPROVAL FROM MECHANICAL ENGINEERING & CAD SERVICES (MECS) Pty Ltd

MECS
Mechanical Engineering & CAD Services
11 Campbell Place WAGGA NSW 2650
Ph: - 0409 985 816
Email: nick@mecservices.com.au

THIRD ANGLE PROJECTION

CLIENT
RODDY ENGINEERING
14 Waratah St TUMUT NSW 2720
Ph: - 02 6947 4039
Email: roddyeng.com.au

TITLE: GENERATOR OIL COOLING MANIFOLD UPGRADE

DWG NO. 3996-60-10 REV A3

DRAWN N DE BRUYN DATE 16/02/2026 SCALE:1:10 SHEET 1 OF 1