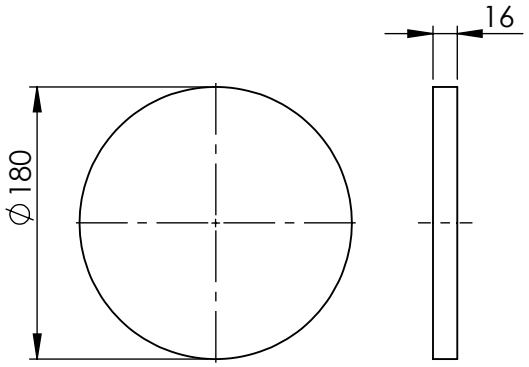

LASER CUT BLANK

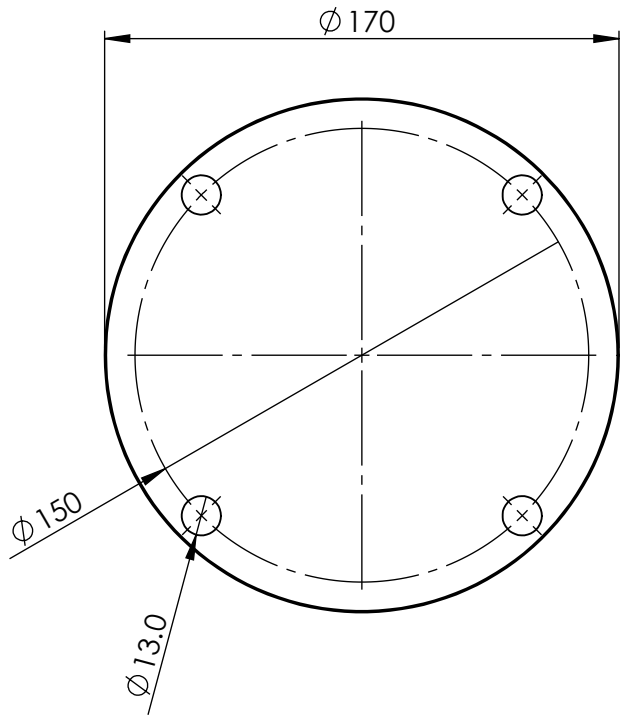

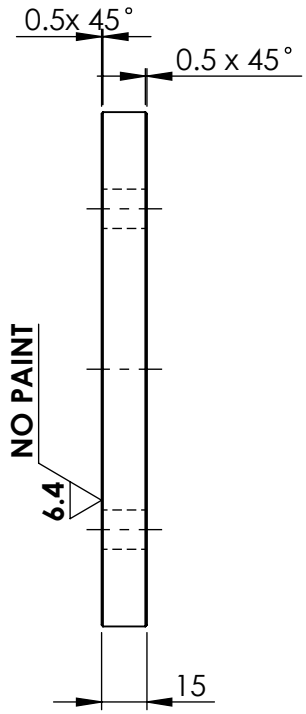

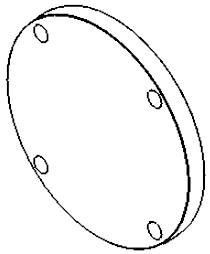

MATERIAL:- MS PLATE GRADE 250

FINISH -GRIT BLAST TO CLASS 2 1/2
PRIME WITH ORGANIC ZINC
2 COATS ENAMEL
COLOR - MATCH PIPEWORK

UNLESS OTHERWISE SPECIFIED: TOLERANCES: MACHINE + / - 0.25mm FABRICATION + / - 1.0 mm

DIMENSIONS IN MILLIMETRES

THIS DRAWING IS THE PROPERTY OF MECHANICAL ENGINEERING & CAD SERVICES (MECS) Pty Ltd & MUST NOT BE MANUFACTURED FROM,COPIED OR TRANSMITTED TO A THIRD PARTY WITHOUT THE PRIOR APPROVAL FROM MECHANICAL ENGINEERING & CAD SERVICES (MECS) Pty Ltd

MECS
Mechanical Engineering & CAD Services
11 Campbell Place WAGGA NSW 2650
Ph: - 0409 985 816
Email: nick@mecservices.com.au

THIRD ANGLE PROJECTION

WEIGHT: 3 3 kg

CLIENT

RODDY ENGINEERING
14 Waratah St TUMUT NSW 2720
Ph: - 02 6947 4039
Email: roddyeng.com.au

TITLE:

170 DIA BLANKING PLATE

DWG NO.	3996-60-20			A4
DRAWN	N DE BRUYN	DATE 16/02/2026	SCALE:1:2.5	SHEET 1 OF 2