DIMENSIONS IN MILLIMETRES

ITEM	DRAWING No	DESCRIPTION	QTY.	MASS (kg)
1	3997-20	25 THK RETAINER PLATE QUARTER 1820 OD x 1000 ID	1	59.3
2	3997-25	10 THK FASTENING FB	2	1.6
3	3997-30	LOCATOR ASSEMBLY	2	1.4

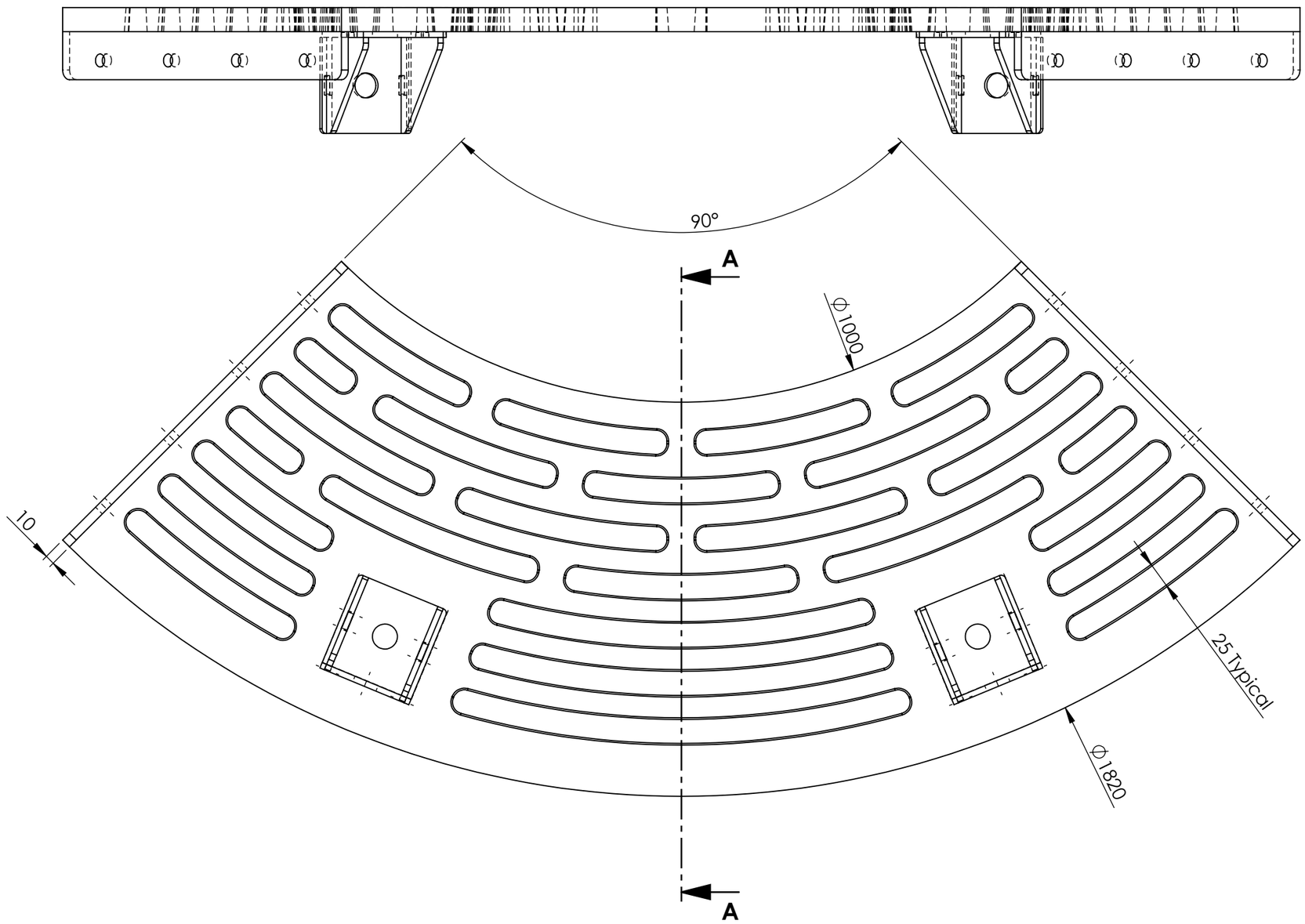

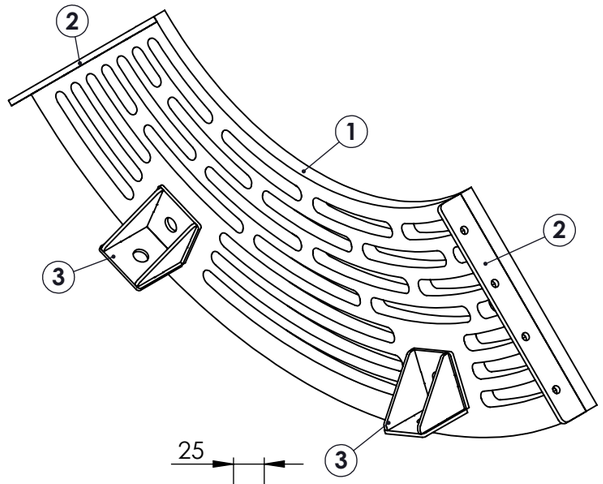

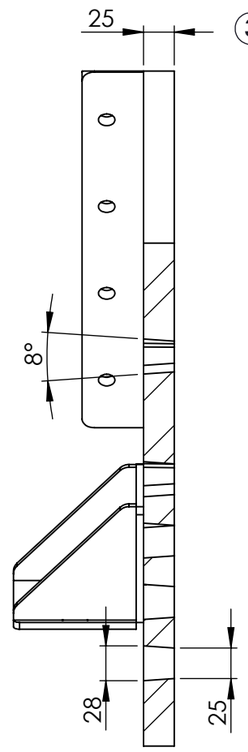

SECTION A-A

UNLESS OTHERWISE SPECIFIED: TOLERANCES: MACHINE + / - 0.25mm FABRICATION + / - 1.0 mm

DIMENSIONS IN MILLIMETRES

THIS DRAWING IS THE PROPERTY OF MECHANICAL ENGINEERING & CAD SERVICES (MECS) Pty Ltd & MUST NOT BE MANUFACTURED FROM,COPIED OR TRANSMITTED TO A THIRD PARTY WITHOUT THE PRIOR APPROVAL FROM MECHANICAL ENGINEERING & CAD SERVICES (MECS) Pty Ltd

MECS
Mechanical Engineering & CAD Services
11 Campbell Place WAGGA NSW 2650
Ph: - 0409 985 816
Email: nick@mecservices.com.au

THIRD ANGLE PROJECTION

WEIGHT: 65.2 kg

CLIENT

Scott Whyman
Welding & Fabrication
'Whymarrar'
1273 Canola Way MARRAR NSW 2652
Ph: - 02 6927 4306
Email: scottandvicki@outlook.com

TITLE: 25 THK RING 1820 OD x 1000 ID ASSEMBLY

DWG NO. 3997-15 REV A3

DRAWN N DE BRUYN DATE 17/02/2026 SCALE:1:5 SHEET 1 OF 1