ITEM NO.	MATERIAL	METAL THICKNESS	MASS (kg)
1	MS PLATE GRADE 250	6	0.4

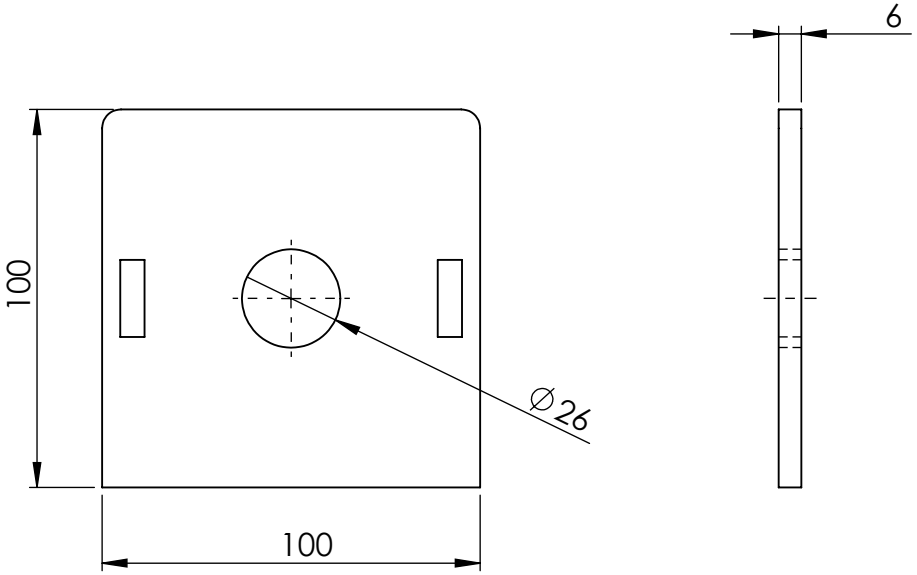

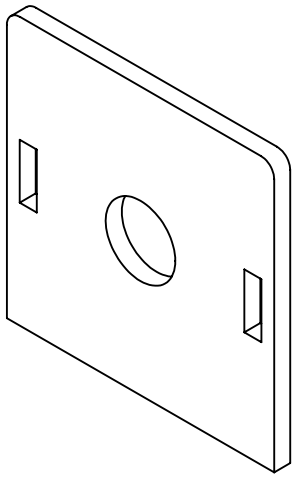

UNLESS OTHERWISE SPECIFIED: TOLERANCES: MACHINE + / - 0.25mm FABRICATION + / - 1.0 mm

DIMENSIONS IN MILLIMETRES

THIS DRAWING IS THE PROPERTY OF MECHANICAL ENGINEERING & CAD SERVICES (MECS) Pty Ltd & MUST NOT BE MANUFACTURED FROM,COPIED OR TRANSMITTED TO A THIRD PARTY WITHOUT THE PRIOR APPROVAL FROM MECHANICAL ENGINEERING & CAD SERVICES (MECS) Pty Ltd

MECS
Mechanical Engineering & CAD Services
11 Campbell Place WAGGA NSW 2650
Ph: - 0409 985 816
Email: nick@mecservices.com.au

THIRD ANGLE PROJECTION

WEIGHT: 0.4 kg

CLIENT

Scott Whyman Welding & Fabrication
'Whymarrar'
1273 Canola Way MARRAR NSW 2652
Ph: - 02 6927 4306
Email: scottandvicki@outlook.com

TITLE:

6 THK 100 SQ HOLED PLATE

DWG NO. 3997-30-15

A4

DRAWN N DE BRUYN DATE 17/02/2026 SCALE:1:2 SHEET 1 OF 2