ITEM	DRAWING No	DESCRIPTION	QTY.	MASS (kg)
1	4229-10-40-20	100NB STAND OFF BRACKET INFILL	1	1
2	4229-10-40-10	100NB BRACKET TO SUIT DOUBLE BOLTED CLAMP	1	2

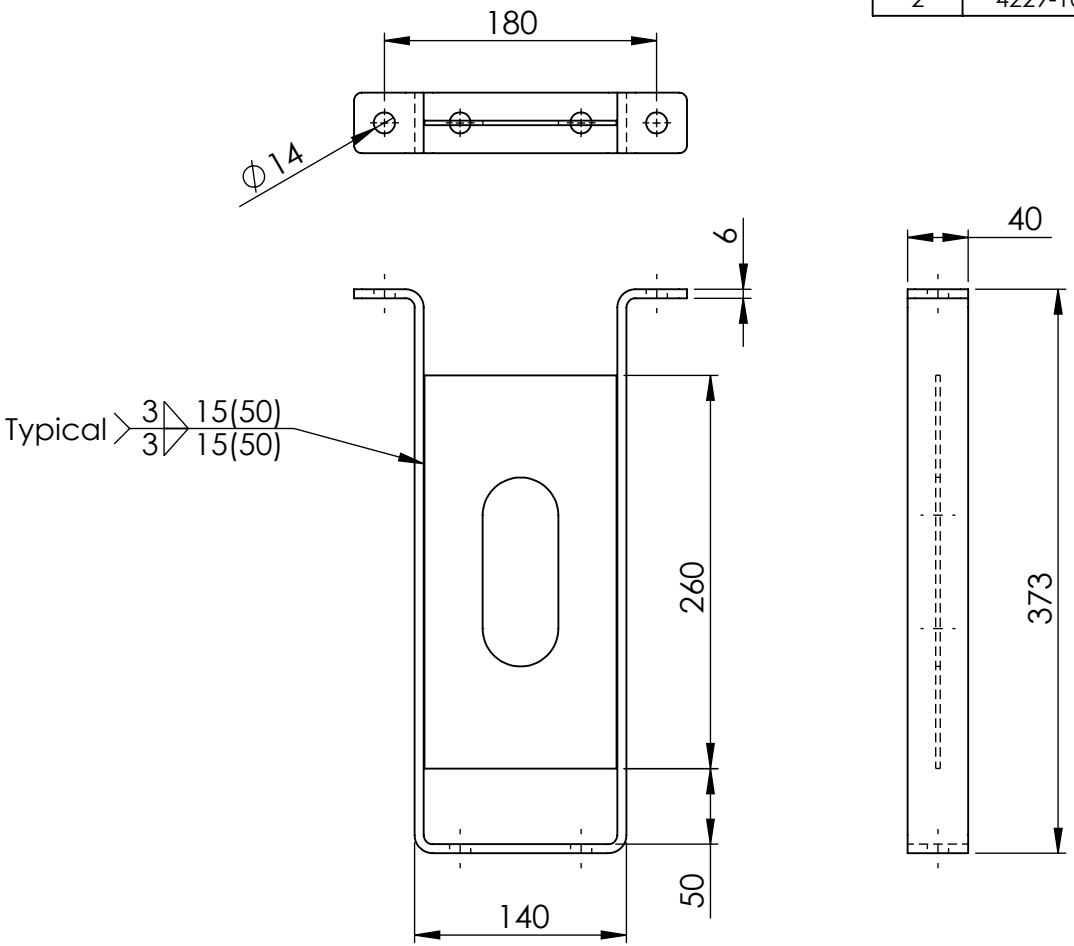

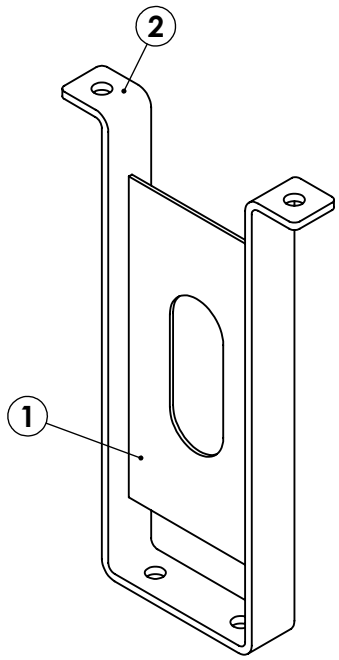

UNLESS OTHERWISE SPECIFIED: TOLERANCES: MACHINE + / - 0.25mm FABRICATION + / - 1.0 mm

DIMENSIONS IN MILLIMETRES

THIS DRAWING IS THE PROPERTY OF MECHANICAL ENGINEERING & CAD SERVICES (MECS) Pty Ltd & MUST NOT BE MANUFACTURED FROM,COPIED OR TRANSMITTED TO A THIRD PARTY WITHOUT THE PRIOR APPROVAL FROM MECHANICAL ENGINEERING & CAD SERVICES (MECS) Pty Ltd

MECS
Mechanical Engineering & CAD Services
11 Campbell Place WAGGA NSW 2650
Ph: - 0409 985 816
Email: nick@mecservices.com.au

THIRD ANGLE PROJECTION

WEIGHT: kg

CLIENT

RODDY ENGINEERING
14 Waratah St TUMUT NSW 2720
Ph: - 02 6947 4039
Email: roddyeng.com.au

TITLE:

100NB STAND OFF BRACKET

DWG NO. 4229-10-40

A4

DRAWN N DE BRUYN DATE 8/12/2025 SCALE:1:5 SHEET 1 OF 1