ITEM	DRAWING No	DESCRIPTION	QTY.	MASS (kg)
1	4229-40-10-10	80NB YOKE CLAMP HANGER 40 x 6 FB	1	0.3
2	4229-20-20	80NB DOUBLE BOLTED CLAMP HALF	1	0.4

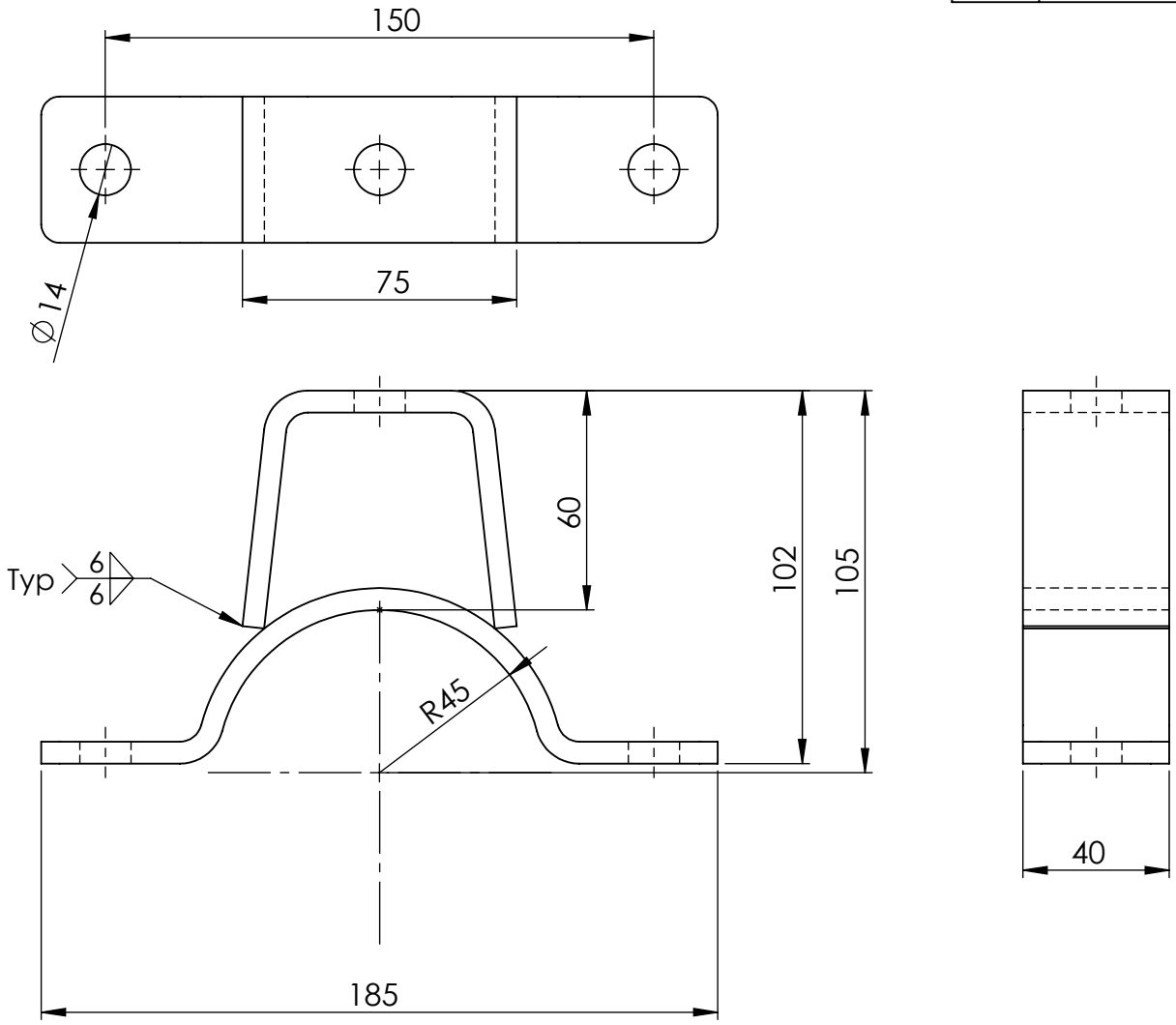

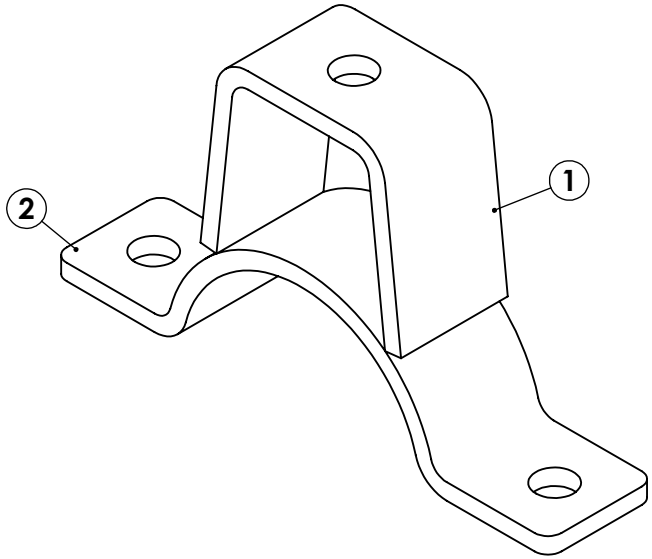

MATERIAL:-

UNLESS OTHERWISE SPECIFIED: TOLERANCES: MACHINE + / - 0.25mm FABRICATION + / - 1.0 mm

DIMENSIONS IN MILLIMETRES

THIS DRAWING IS THE PROPERTY OF MECHANICAL ENGINEERING & CAD SERVICES (MECS) Pty Ltd & MUST NOT BE MANUFACTURED FROM,COPIED OR TRANSMITTED TO A THIRD PARTY WITHOUT THE PRIOR APPROVAL FROM MECHANICAL ENGINEERING & CAD SERVICES (MECS) Pty Ltd

MECS
Mechanical Engineering & CAD Services
11 Campbell Place WAGGA NSW 2650
Ph: - 0409 985 816
Email: nick@mecservices.com.au

THIRD ANGLE PROJECTION

WEIGHT: kg

CLIENT

RODDY ENGINEERING
14 Waratah St TUMUT NSW 2720
Ph: - 02 6947 4039
Email: roddyeng.com.au

TITLE: 80NB YOKE CLAMP TOP HALF 304 S/S

DWG NO. 4229-40-10

A4

DRAWN N DE BRUYN DATE 29/12/2025 SCALE:1:2 SHEET 1 OF 1