| ITEM | DRAWING No | DESCRIPTION | QTY. | MASS (kg) |
|---|---|---|---|---|
| 1 | OEM-M12-USN-304 | M12x1.75 UNISTRUT NUT 304 S/S | 1 | |
| 2 | OEM-M12-AT-250-304 | M12x1.75 ALLTHREAD 250 LONG 304 S/S | 1 | 0.2 |
| 3 | M12-FW-SQ-304 | M12 x 40 SQUARE 6 thk WASHER 304 S/S | 1 | |
| 4 | 4229-40-20-10 | 15NB SHED 40 304 S/S 183 LONG | 1 | 0.2 |
| 5 | 4229-40-20 | 80NB YOKE CLAMP ASSEMBLIED 304 S/S | 1 | 1.3 |
| 6 | | M12 FLAT WASHER 304 S/S (24x14x1.5) | 1 | 0.00 |
| 7 | | M12x1.75 HEX NUT 304 S/S | 1 | |

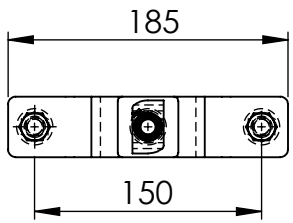


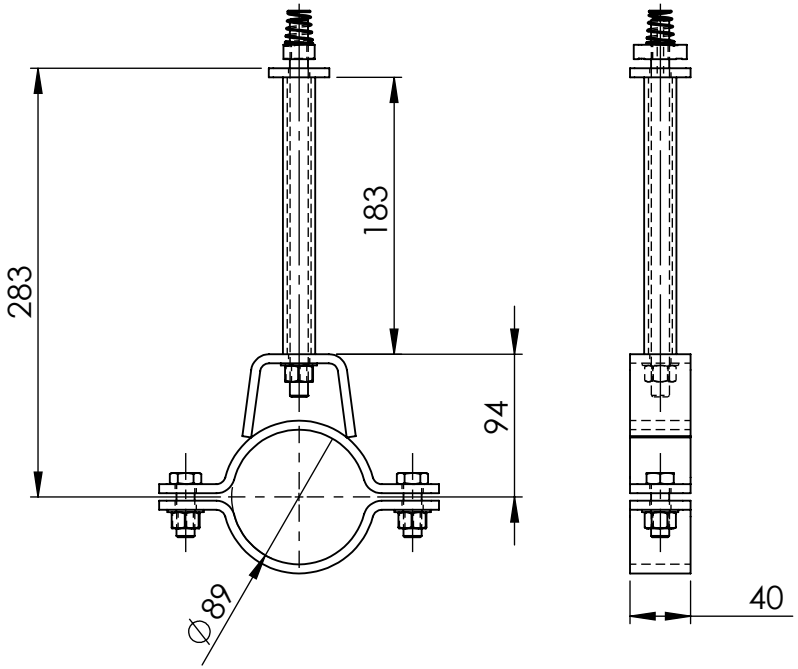


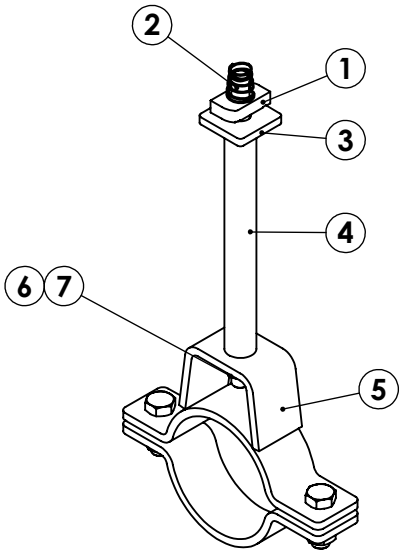


UNLESS OTHERWISE SPECIFIED: TOLERANCES: MACHINE + / - 0.25mm FABRICATION + / - 1.0 mm

DIMENSIONS IN MILLIMETRES

THIS DRAWING IS THE PROPERTY OF MECHANICAL ENGINEERING & CAD SERVICES (MECS) Pty Ltd & MUST NOT BE MANUFACTURED FROM,COPIED OR TRANSMITTED TO A THIRD PARTY WITHOUT THE PRIOR APPROVAL FROM MECHANICAL ENGINEERING & CAD SERVICES (MECS) Pty Ltd

MECS
Mechanical Engineering & CAD Services
11 Campbell Place WAGGA NSW 2650
Ph: - 0409 985 816
Email: nick@mecservices.com.au

THIRD ANGLE PROJECTION

WEIGHT: 1.9 kg

CLIENT

RODDY ENGINEERING

14 Waratah St TUMUT NSW 2720
Ph: - 02 6947 4039
Email: roddyeng.com.au

TITLE: 80NB YOKE HANGER ASSY 283mm OFFSET

DWG NO. 4229-40-40

A4

DRAWN N DE BRUYN DATE 29/12/2025 SCALE:1:5 SHEET 1 OF 1