ITEM	DRAWING No	DESCRIPTION	QTY.	MASS (kg)
1	4229-50-20-30	100NB SADDLE 40 x 6FB	2	1.0
2	4229-50-20-25	40x6 FB 53 Lg x 1 HOLE	1	0.1
3	4229-50-20-20	65x6 FB 62 Lg x 1 HOLE	1	0.2
4	4229-50-20-15	65x6 FB 85 Lg x 1 HOLE	1	0.3
5	4229-50-10-10	40x6 FB 50 Lg x 1 HOLE	2	0.1
6	4229-50-20-35	80NB SADDLE 40 x 6FB	2	0.8

BRACKET MARKED AS "**D**"

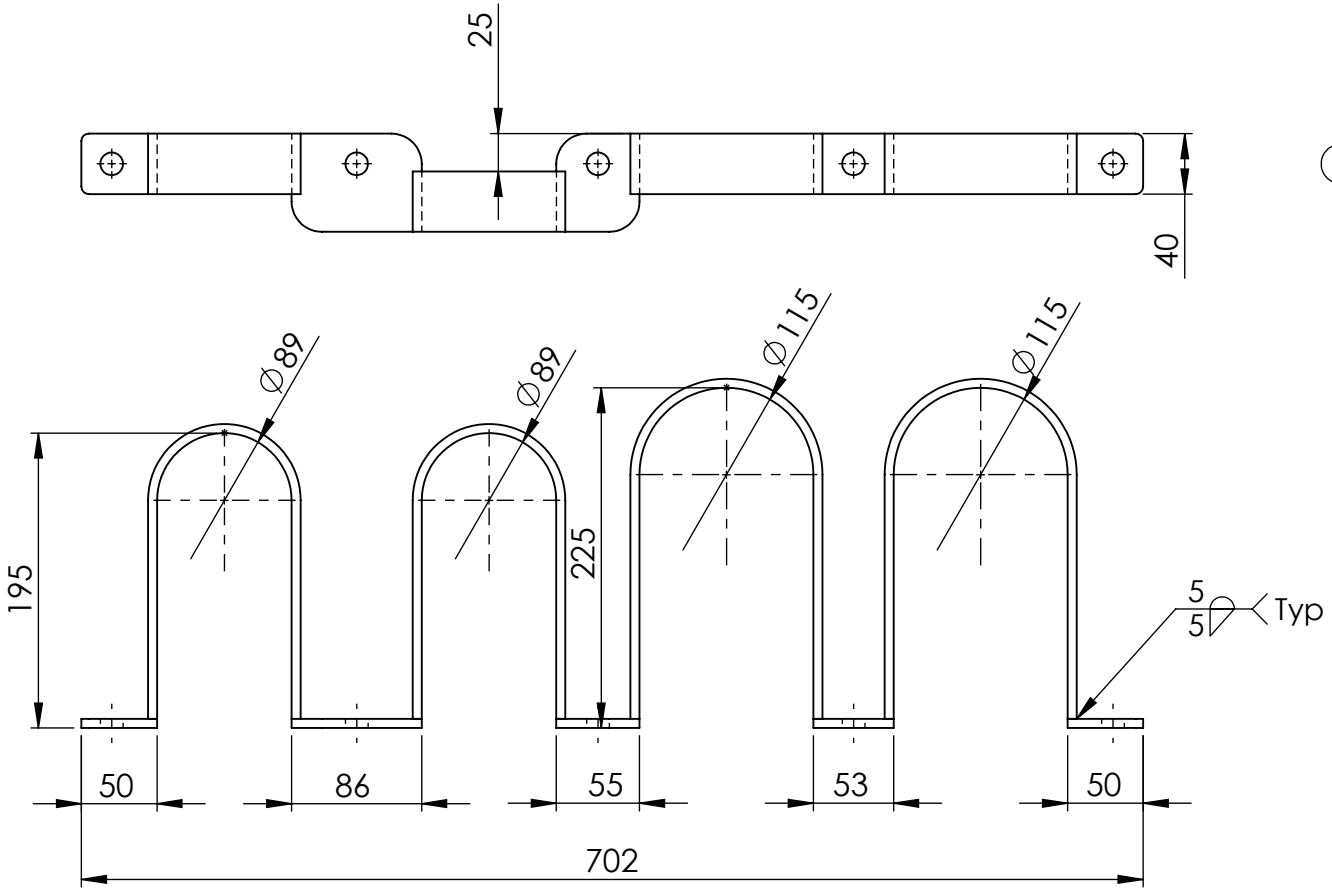

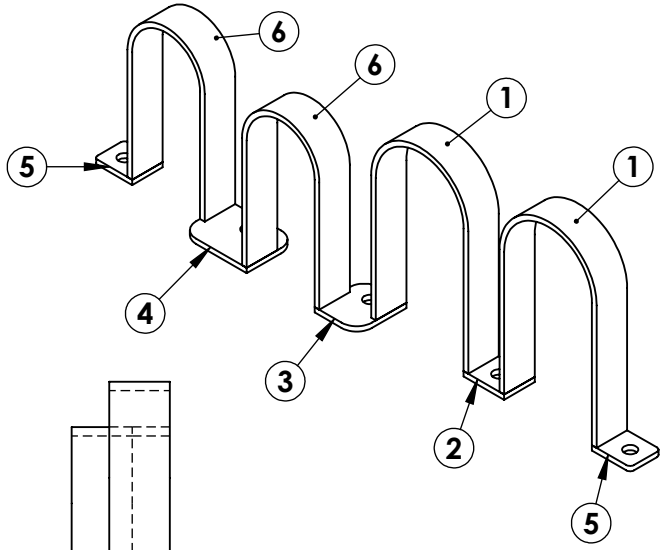

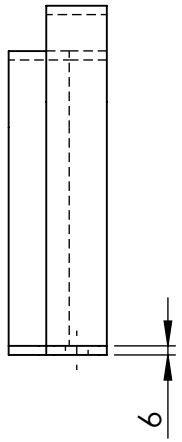

UNLESS OTHERWISE SPECIFIED: TOLERANCES: MACHINE + / - 0.25mm FABRICATION + / - 1.0 mm

DIMENSIONS IN MILLIMETRES

THIS DRAWING IS THE PROPERTY OF MECHANICAL ENGINEERING & CAD SERVICES (MECS) Pty Ltd & MUST NOT BE MANUFACTURED FROM,COPIED OR TRANSMITTED TO A THIRD PARTY WITHOUT THE PRIOR APPROVAL FROM MECHANICAL ENGINEERING & CAD SERVICES (MECS) Pty Ltd

MECS
Mechanical Engineering & CAD Services
11 Campbell Place WAGGA NSW 2650
Ph: - 0409 985 816
Email: nick@mecservices.com.au

THIRD ANGLE PROJECTION

WEIGHT: 4.3 kg

CLIENT

RODDY ENGINEERING
14 Waratah St TUMUT NSW 2720
Ph: - 02 6947 4039
Email: roddyeng.com.au

TITLE: 100 NB x 2 & 80 NB x 2 MULTI SADDLE 304 S/S

DWG NO. 4229-50-20 | A4

DRAWN N DE BRUYN | DATE 23/12/2025 | SCALE:1:5 | SHEET 1 OF 1