ITEM	DRAWING No	DESCRIPTION	QTY.	MASS (kg)
1	4229-50-30-15	100NB SPACER BRACKET PLATE 2	2	0.1
2	4229-50-30-10	100NB SPACER BRACKET PLATE 1	2	0.4

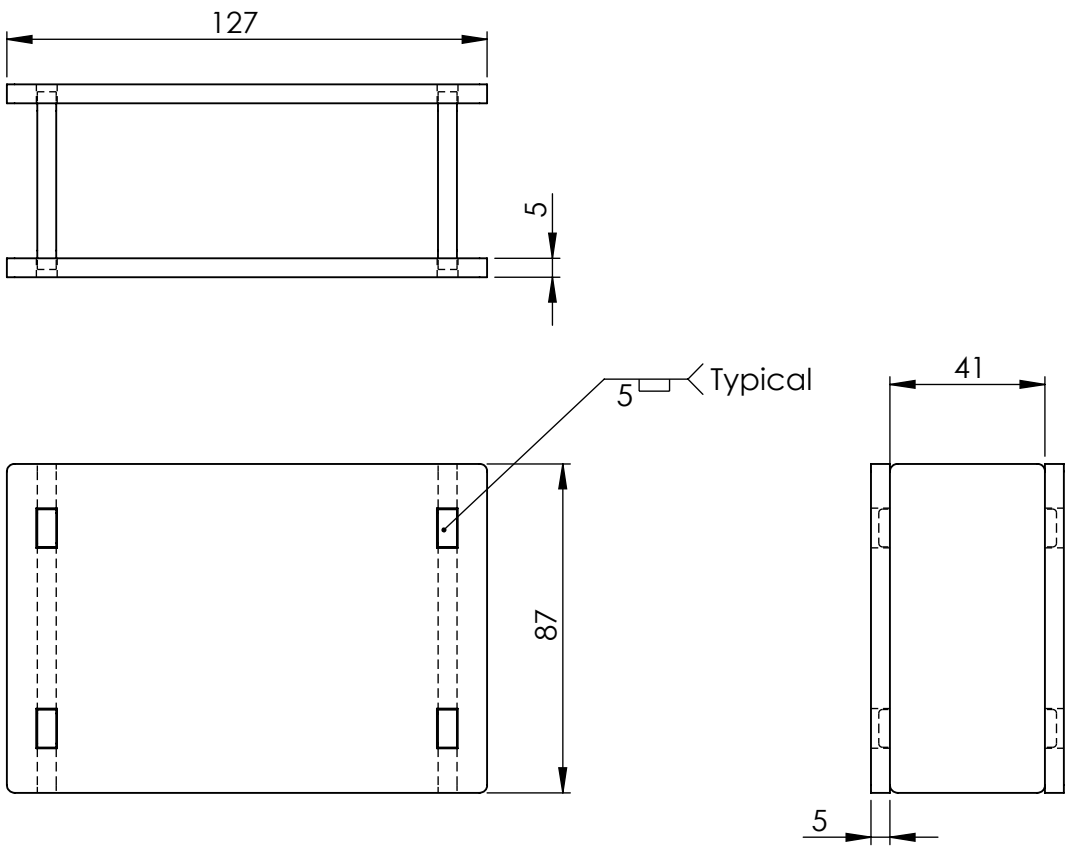

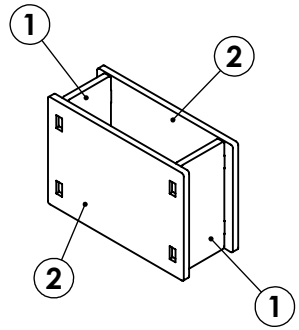

MATERIAL:-

UNLESS OTHERWISE SPECIFIED: TOLERANCES: MACHINE + / - 0.25mm FABRICATION + / - 1.0 mm

DIMENSIONS IN MILLIMETRES

THIS DRAWING IS THE PROPERTY OF MECHANICAL ENGINEERING & CAD SERVICES (MECS) Pty Ltd & MUST NOT BE MANUFACTURED FROM,COPIED OR TRANSMITTED TO A THIRD PARTY WITHOUT THE PRIOR APPROVAL FROM MECHANICAL ENGINEERING & CAD SERVICES (MECS) Pty Ltd

MECS
Mechanical Engineering & CAD Services
11 Campbell Place WAGGA NSW 2650
Ph: - 0409 985 816
Email: nick@mecservices.com.au

THIRD ANGLE PROJECTION

WEIGHT: kg

CLIENT

RODDY ENGINEERING

14 Waratah St TUMUT NSW 2720
Ph: - 02 6947 4039
Email: roddyeng.com.au

TITLE: 100 NB SADDLE 87 mm SPACER BRACKET

DWG NO. 4229-50-30

A4

DRAWN N DE BRUYN DATE 7/01/2026 SCALE:1:2 SHEET 1 OF 1