DIMENSIONS IN MILLIMETRES

ITEM NO.	QTY.	DESCRIPTION	LENGTH	MATERIAL
1	1	125x125x10 EA	170	BHP - 300 PLUS

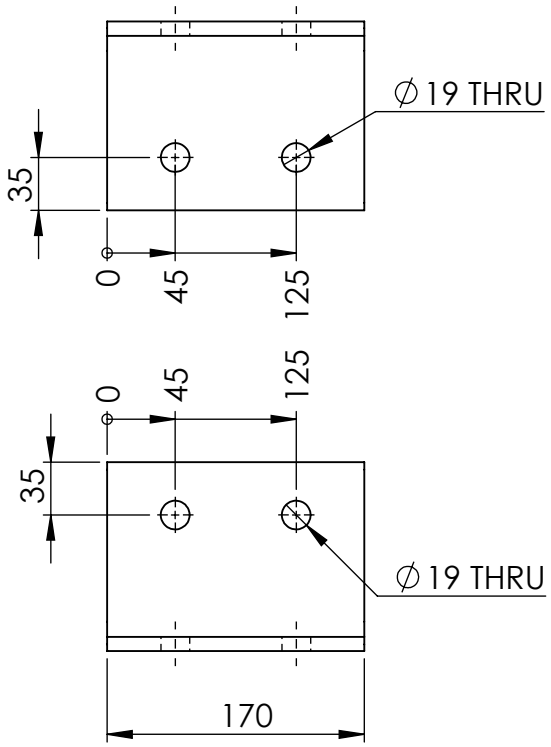

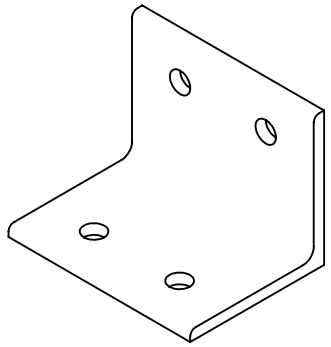

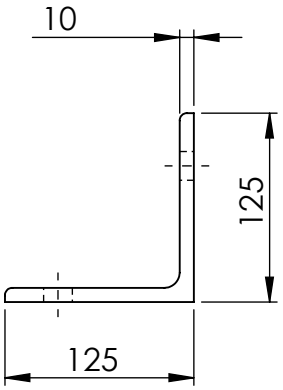

FINISH - PAINTED ZINC RICH PRIMER

MATERIAL:- MILD STEEL

UNLESS OTHERWISE SPECIFIED: TOLERANCES: MACHINE + / - 0.25mm FABRICATION + / - 1.0 mm

THIS DRAWING IS THE PROPERTY OF MECHANICAL ENGINEERING & CAD SERVICES (MECS) Pty Ltd & MUST NOT BE MANUFACTURED FROM,COPIED OR TRANSMITTED TO A THIRD PARTY WITHOUT THE PRIOR APPROVAL FROM MECHANICAL ENGINEERING & CAD SERVICES (MECS) Pty Ltd

THIRD ANGLE PROJECTION

WEIGHT: 3 Kg

MECS
Mechanical Engineering & CAD Services
11 Campbell Place WAGGA NSW 2650
Ph: - 0409 985 816
Email: nick@mecservices.com.au

TITLE: 125x10 EA -TIMBER CONNECTION EA

DWG NO. 50-10 REV

A4

DRAWN N DE BRUYN DATE 30/10/2025 SCALE:1:5 SHEET 1 OF 1