# NOTES:

1. ALL WELDS TO AS 1554 Pt 1 Cat. GP
2. USE TABS AND RECTANGULAR HOLES FOR LINE UP
3. ALL WELDS TO BE 5mm CONTINUOUS FILLET WELDS UNLESS STATED OTHERWISE
4. REMOVE ALL SHARP EDGES AND CORNERS AND DE-BUR ALL HOLES

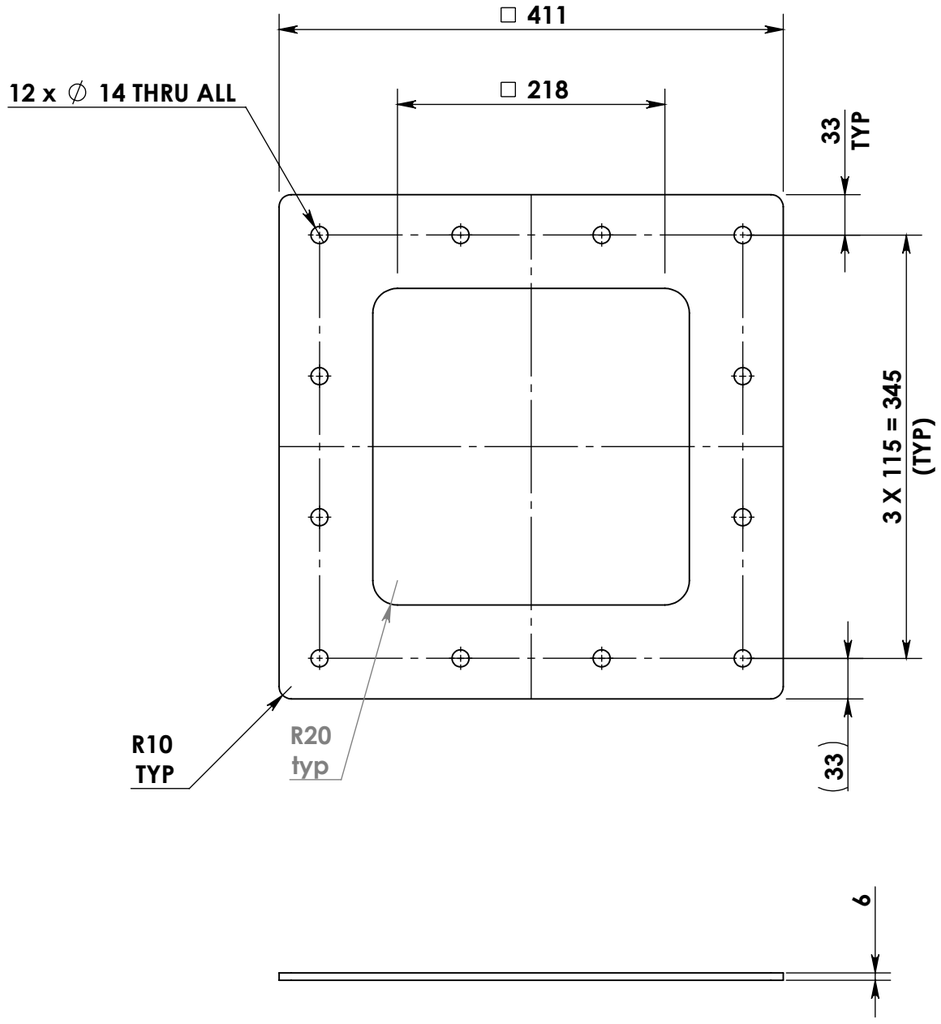


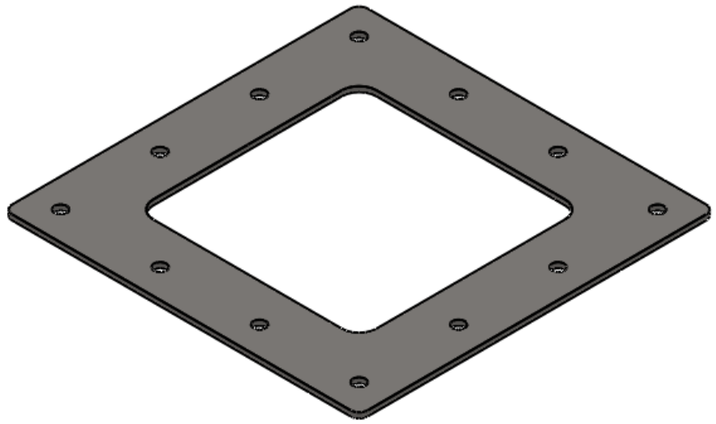

| ZONE | REV. | DESCRIPTION | DATE | CHANGE BY |
|---|---|---|---|---|
| | 1 | | 6/05/2021 | FQ |


DISCLAIMER:
The copyright in this document (including its electronic form) shall remain vested in Total Engineering Systems Pty Ltd ("TES"). TES shall not be liable for the use by any person of this document for any purpose other than that for which the same was provided by TES. This document shall not be reproduced in whole or in part or relied upon by third parties for any use whatsoever without the express written authority of TES.


| | NAME | DATE |
|---|---|---|
| DRAWN | FQ | 6/05/2021 |
| CHECKED & APPROVED | DG | 29/09/2021 |

| | |
|---|---|
| PART No: | AWS-A-008969 |
| DESCRIPTION: | TOP HOPPER PLATE |
| MATERIAL: | SS304 |
| FINISH: | NATURAL - |

REV: 1

UNLESS OTHERWISE SPECIFIED:
MACHINING ± 0.25 mm
FABRICATION ±1.0 mm
DIMENSIONS ARE IN MILLIMETERS
MATERIAL STANDARD AS3678, AS/NZS 1163

PROCESS 1: LASERCUT
PROCESS 2:

THIRD ANGLE PROJECTION

DO NOT SCALE DRAWING

SHEET SCALE: 1:5

**Total Engineering Systems** Pty Ltd
A.C.N. 058 536 575

MASS: 4.9 KG

1 of 2

SHEET SIZE: A3
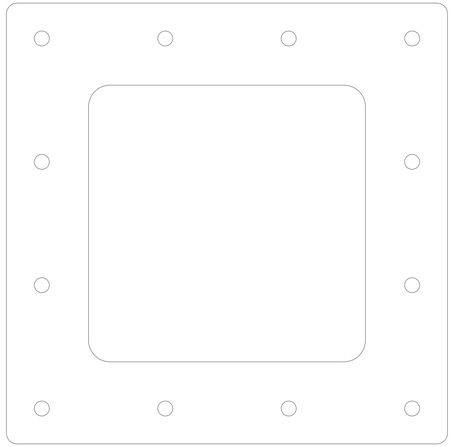
Part Number: AM5-A-008fe9
Quantity:1
Material:CG304
Material Thickness:16
Bending Box Width: 411
Bending Box Depth: 411
X:1
Cutting Length-Outer: 1426.8 Cutting Length-Inner: 1325.5 Cut Cuts:13