REVISIONS			
ZONE	REV.	DESCRIPTION	DATE
	A	FOR QUOTATION	04/07/24

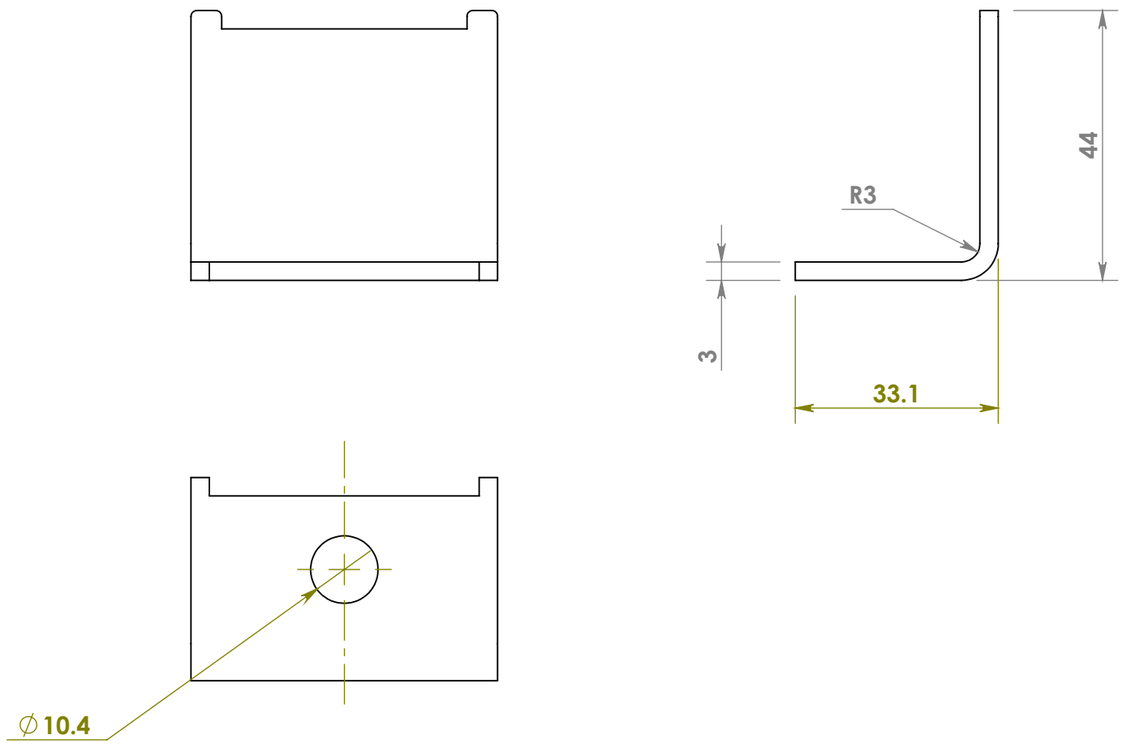

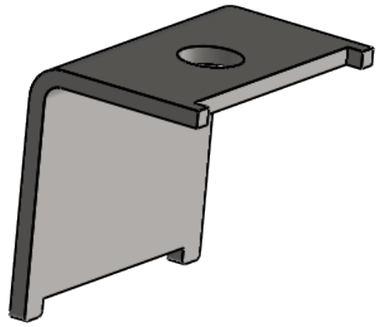

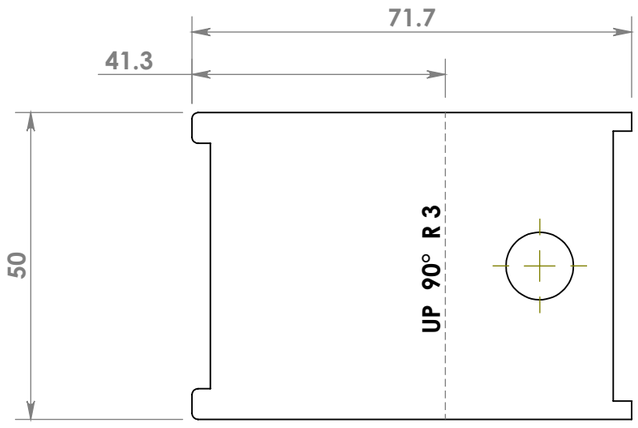

FlattPattern

SHEET METAL PROPERTIES	
THICKNESS (mm)	3
BEND RADIUS (mm)	3
BEND ALLOWANCE	0.4
BENDS	1
LENGTH (mm)	71.7
WIDTH (mm)	50
AREA (mm^2)	3248
BLANK AREA(mm^2)	3585.8
CUTOUTS	1
OUTER CUT LENGTH (mm)	253.7
INNER CUT LENGTH (mm)	1

PART No:	CV03-C-09	REV: A	MASS	0.1 kg
DESCRIPTION:			PROCESS 1	LASERCUT
MATERIAL:	PLAIN CARBON STEEL		PROCESS 2	
FINISH:	N/A - N/A		PROCESS 3	

THIRD ANGLE PROJECTION

UNLESS OTHERWISE SPECIFIED:
Linear Dimensions ± 1 mm
Angular ± 0° 30'

DO NOT SCALE DRAWING | Units: mm,Kg,deg

TinyMRP
www.tinymrp.com

SIZE: A3 | SHEET SCALE: 1:1 | 1 of 1