ITEM NO.	PART NUMBER	DESCRIPTION	QTY.
1	CV03-F01	CORE FRAME	1
2	CV03-TR-26	MUDGUARD BRACKET A	2
3	CV03-TR-27	MUDGUARD BRACKET B	2
4	HANGER-F	FRONT HANGER	2
5	HANGER-R	REAR HANGER	2
6	4177-35-CHAIN	SAFETY CHAIN	2

REVISIONS				
ZONE	REV.	DESCRIPTION	DATE	APPROVED
	A	QUOTATION	10/10/2024	

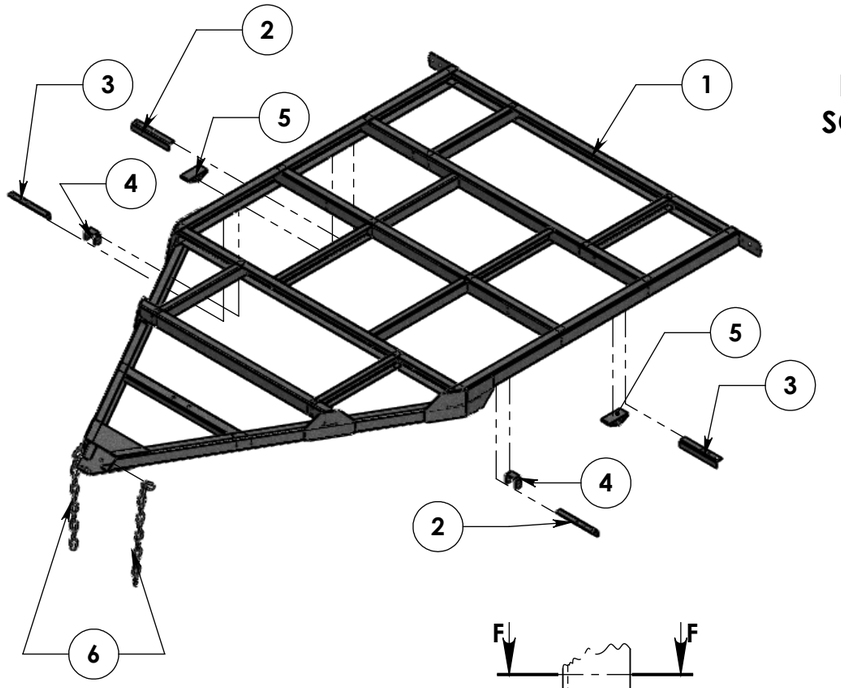

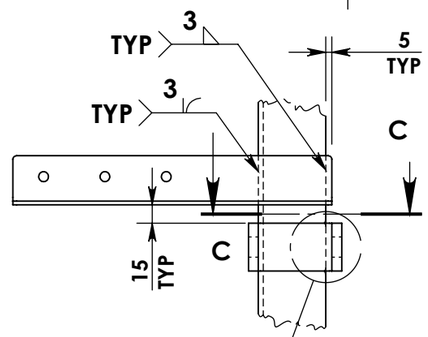

DETAIL A
SCALE 1 : 5

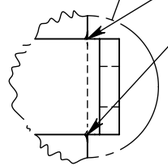

DETAIL B
SCALE 2 : 5

NOTCHES PROVIDED ON FRAME BEAMS TO LOCATE HANGERS

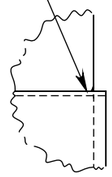

DETAIL E
SCALE 2 : 5

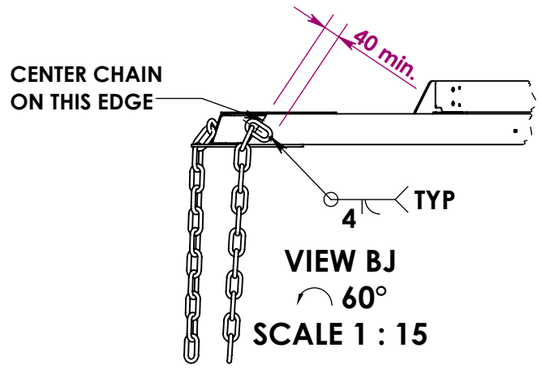

VIEW BJ
60°
SCALE 1 : 15

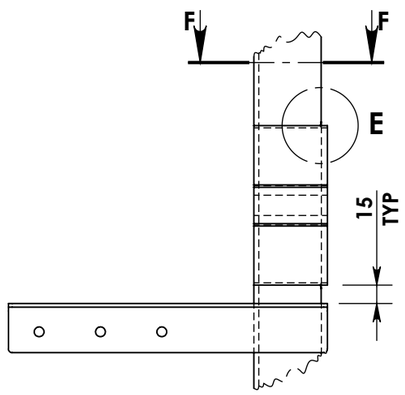

DETAIL D
SCALE 1 : 5

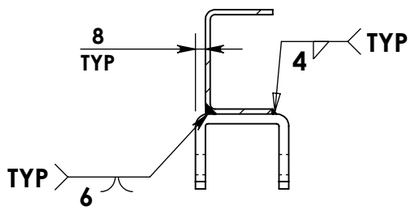

SECTION C-C
SCALE 1 : 5

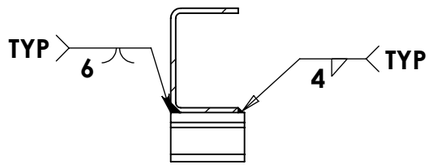

SECTION F-F
SCALE 1 : 5

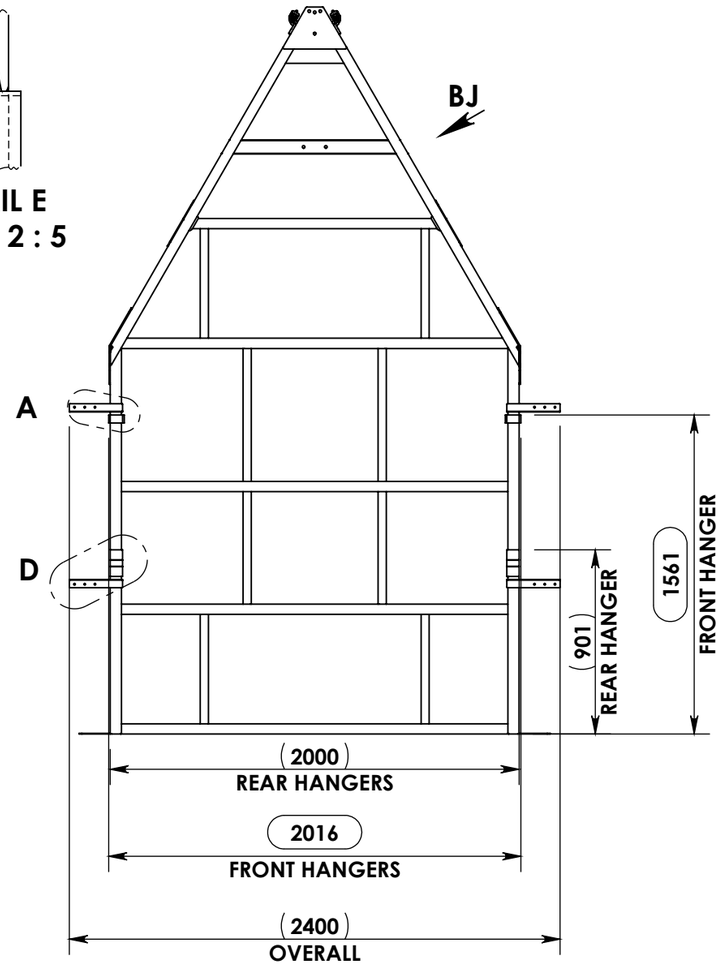

BOTTOM VIEW

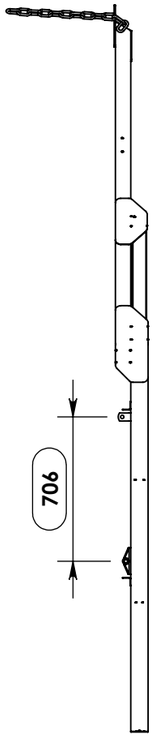

7. All welds shall be of sound quality, free from cracks, porosity, undercut, or other defects.
6. All welds shall be visually inspected
5. Fillet welds shall be a minimum of 2 mm unless otherwise specified.
4. All groove welds shall have a complete penetration unless otherwise specified.
3. All surfaces to be welded shall be clean, free from scale, rust, oil, grease, or other contaminants.
2. All welds shall be cleaned of slag, spatter, and other foreign matter.
1. Measures shall be taken to mantain aligment and minimize distortion and residual stress.

Welding Notes:

PART No:	CV03-F02	REV: B	MASS	113.3 kg
DESCRIPTION:	TRAILER FRAME		PROCESS 1	WELDING
MATERIAL:	MILD STEEL FABRICATION		PROCESS 2	
FINISH:	POWDERCOAT - BLACK		PROCESS 3	

THIRD ANGLE PROJECTION

UNLESS OTHERWISE SPECIFIED:
Linear Dimensions ± 1 mm
Angular ± 0° 30'

DO NOT SCALE DRAWING | Units: mm,Kg,deg

TinyMRP
www.tinymrp.com

SIZE: A3 | SHEET SCALE: 1:30 | 1 of 1