ITEM NO.	PART NUMBER	DESCRIPTION	QTY.
1	CV03-C-05		1
2	WELDNUT-M8	M8 Mild steel weldnut	1

REVISIONS			
ZONE	REV.	DESCRIPTION	DATE
	1	FOR QUOTATION	6/15/2024

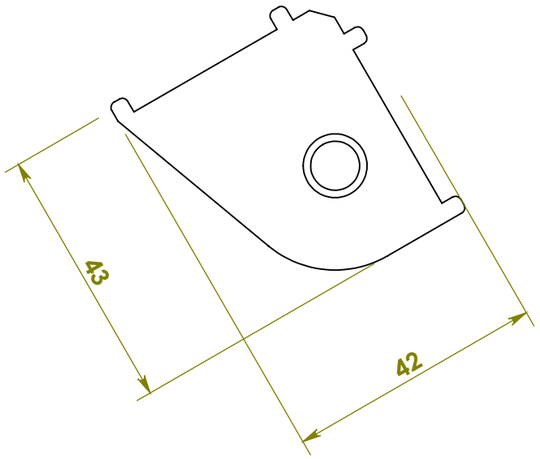

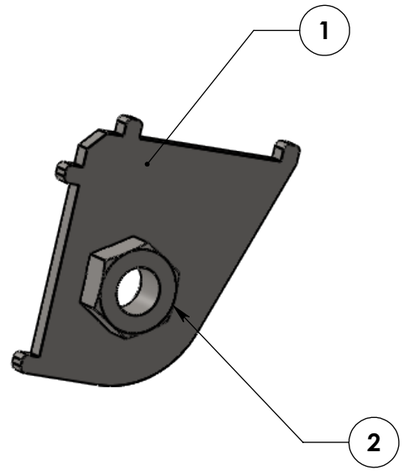

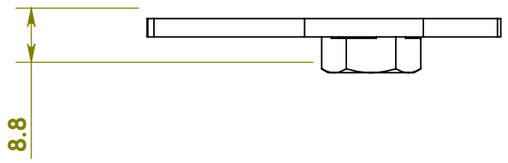

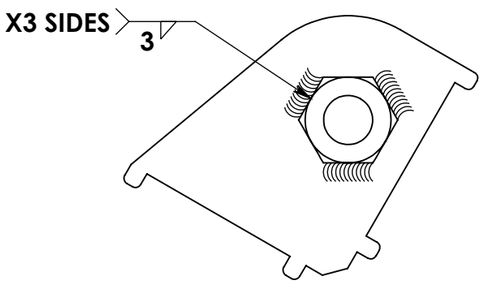

7. All welds shall be of sound quality, free from cracks, porosity, undercut, or other defects.
6. All welds shall be visually inspected
5. Fillet welds shall be a minimum of 2 mm unless otherwise specified.
4. All groove welds shall have a complete penetration unless otherwise specified.
3. All surfaces to be welded shall be clean, free from scale, rust, oil, grease, or other contaminants.
2. All welds shall be cleaned of slag, spatter, and other foreign matter.
1. Measures shall be taken to mantain aligment and minimize distortion and residual stress.

Welding Notes:

PART No:	CV03-F13	REV: A	MASS	0.0 kg	THIRD ANGLE PROJECTION	DO NOT SCALE DRAWING / Units: mm,Kg,deg
DESCRIPTION:			PROCESS 1	WELDING		TinyMRP www.tinymrp.com
MATERIAL:			PROCESS 2		UNLESS OTHERWISE SPECIFIED: Linear Dimensions ± 1 mm Angular ± 0° 30'	
FINISH:	N/A - N/A		PROCESS 3			SIZE: A3 / SHEET SCALE: 1:1 / 1 of 1