REVISIONS			
ZONE	REV.	DESCRIPTION	DATE
	A	FOR QUOTATION	04/07/24

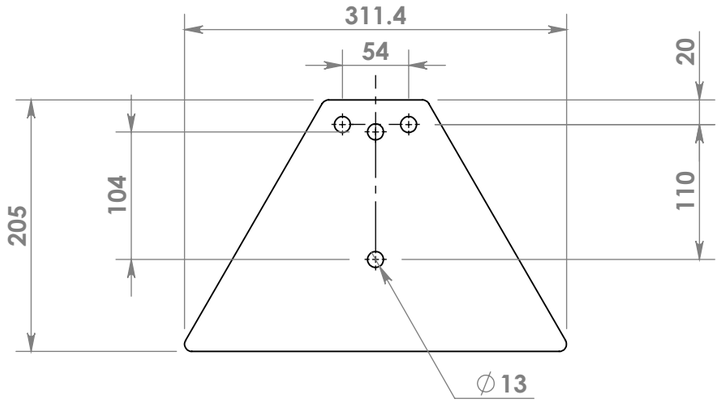

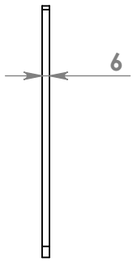

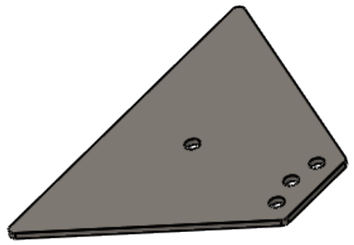

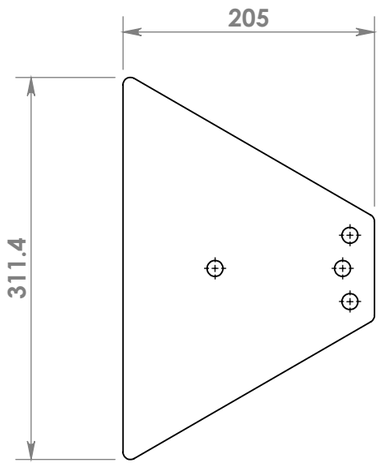

FlattPattern

SHEET METAL PROPERTIES	
THICKNESS (mm)	6
BEND RADIUS (mm)	6
BEND ALLOWANCE	0.4
BENDS	0
LENGTH (mm)	311.4
WIDTH (mm)	205
AREA (mm^2)	40795.4
BLANK AREA(mm^2)	63841.8
CUTOUTS	4
OUTER CUT LENGTH (mm)	859.4
INNER CUT LENGTH (mm)	4

PART No:	CV03-TR-03	REV: B	MASS	1.9 kg	THIRD ANGLE PROJECTION
DESCRIPTION:	HITCH PLATE A		PROCESS 1	LASERCUT	
MATERIAL:	MS PLATE GRADE 350		PROCESS 2		UNLESS OTHERWISE SPECIFIED: Linear Dimensions ± 0.5 mm Angular ± 0° 30'
FINISH:	N/A - N/A		PROCESS 3		

DO NOT SCALE DRAWING | Units: mm,Kg,deg

TinyMRP
www.tinymrp.com

SIZE: A3 | SHEET SCALE: 1:5 | 1 of 1