REVISIONS			
ZONE	REV.	DESCRIPTION	DATE
	A	FOR QUOTATION	04/07/24

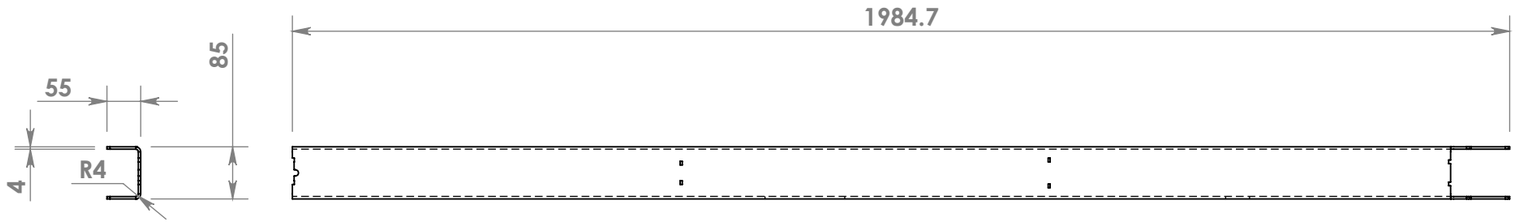

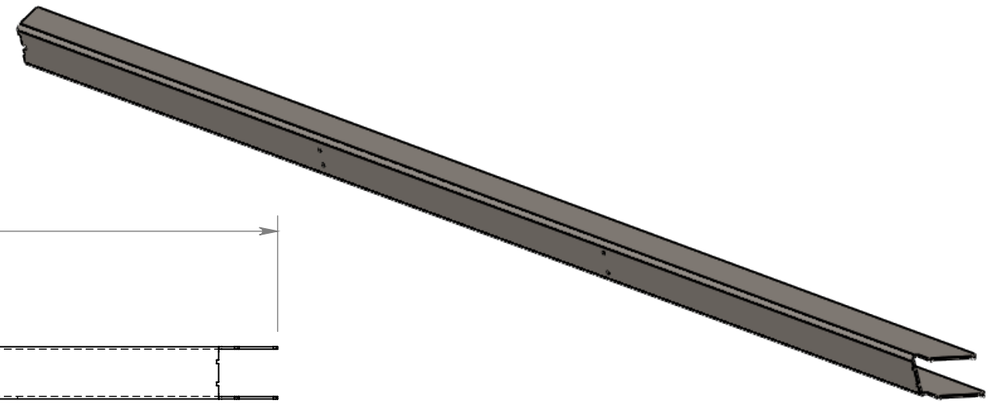

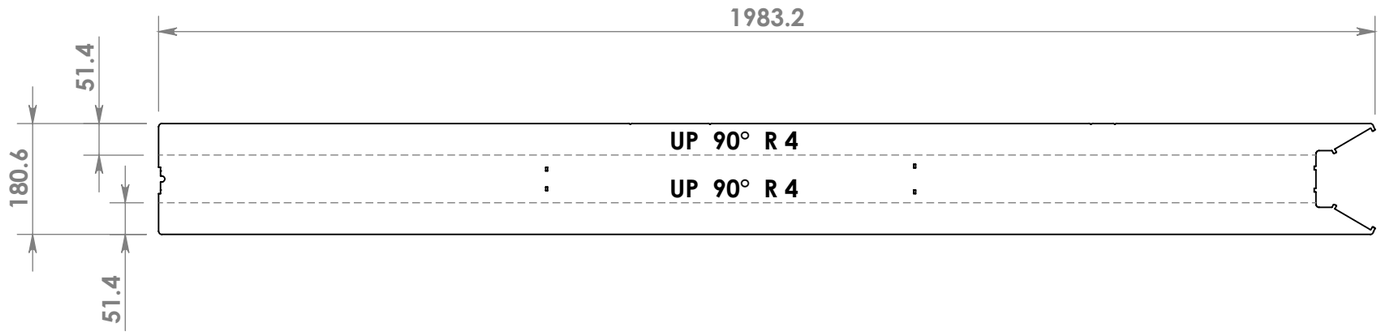

FlattPattern

SHEET METAL PROPERTIES	
THICKNESS (mm)	4
BEND RADIUS (mm)	4
BEND ALLOWANCE	0.4
BENDS	2
LENGTH (mm)	1983.2
WIDTH (mm)	180.6
AREA (mm^2)	346174.9
BLANK AREA(mm^2)	358158.3
CUTOUTS	4
OUTER CUT LENGTH (mm)	4514.4
INNER CUT LENGTH (mm)	4

PART No:	CV03-TR-13	REV: B	MASS	10.9 kg
DESCRIPTION:	85X55X4 CHANNEL 1983 B		PROCESS 1	LASERCUT
MATERIAL:	MS PLATE GRADE 350		PROCESS 2	FOLDING
FINISH:	N/A - N/A		PROCESS 3	

THIRD ANGLE PROJECTION

UNLESS OTHERWISE SPECIFIED:
Linear Dimensions ± 0.5 mm
Angular ± 0° 30'

DO NOT SCALE DRAWING | Units: mm,Kg,deg

TinyMRP
www.tinymrp.com

SIZE: A3 | SHEET SCALE: 1:10 | 1 of 1