| REVISIONS | | | |
|---|---|---|---|
| ZONE | REV. | DESCRIPTION | DATE |
| | A | FOR QUOTATION | 04/07/24 |

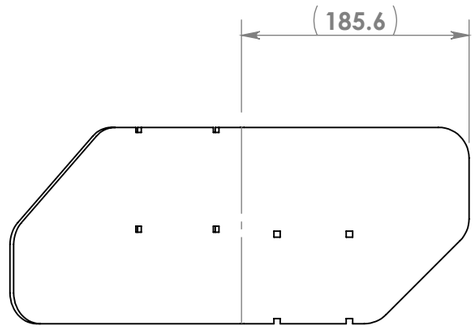


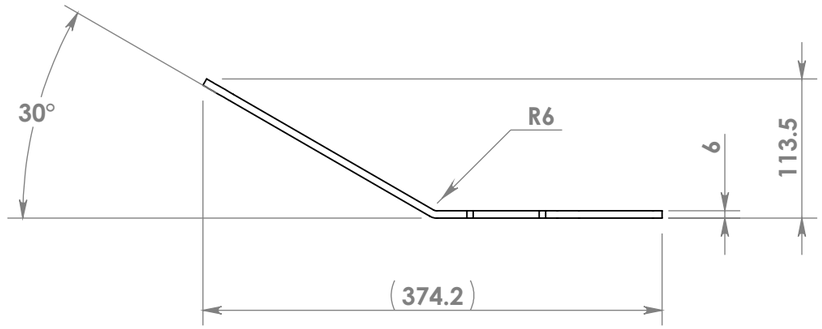


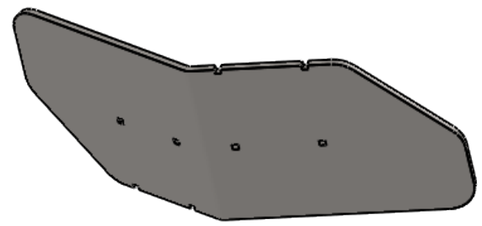

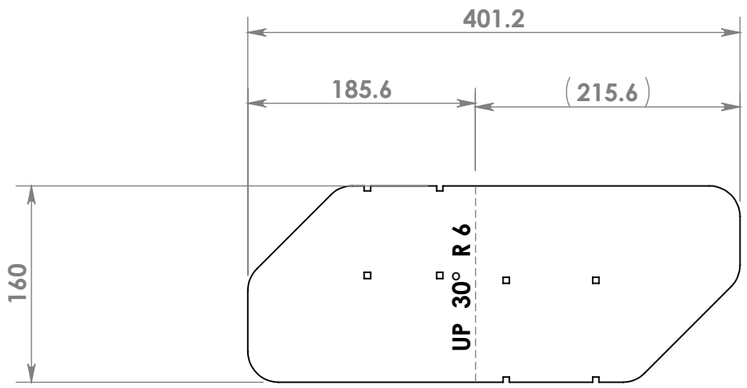


# FlattPattern

| SHEET METAL PROPERTIES | |
|---|---|
| THICKNESS (mm) | 6 |
| BEND RADIUS (mm) | 6 |
| BEND ALLOWANCE | 0.4 |
| BENDS | 1 |
| LENGTH (mm) | 401.2 |
| WIDTH (mm) | 160 |
| AREA ($mm^2$) | 57252.9 |
| BLANK AREA($mm^2$) | 64189.3 |
| CUTOUTS | 4 |
| OUTER CUT LENGTH (mm) | 1035.7 |
| INNER CUT LENGTH (mm) | 4 |

| | | | | |
|---|---|---|---|---|
| PART No: | CV03-TR-14 | REV: B | MASS | 2.7 kg |
| DESCRIPTION: | LINK PLATE RH | | PROCESS 1 | LASERCUT |
| MATERIAL: | MS PLATE GRADE 350 | | PROCESS 2 | FOLDING |
| FINISH: | N/A - N/A | | PROCESS 3 | |

THIRD ANGLE PROJECTION

UNLESS OTHERWISE SPECIFIED:
Linear Dimensions ± 0.5 mm
Angular ± 0° 30'

DO NOT SCALE DRAWING | Units: mm,Kg,deg

TinyMRP
www.tinymrp.com

SIZE: A3 | SHEET SCALE: 1:5 | 1 of 1