REVISIONS			
ZONE	REV.	DESCRIPTION	DATE
	A	FOR QUOTATION	04/07/24

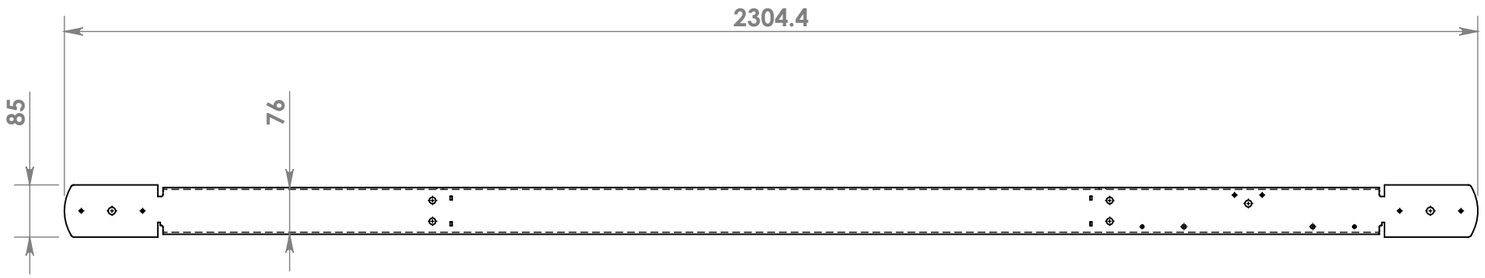

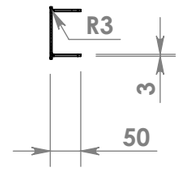

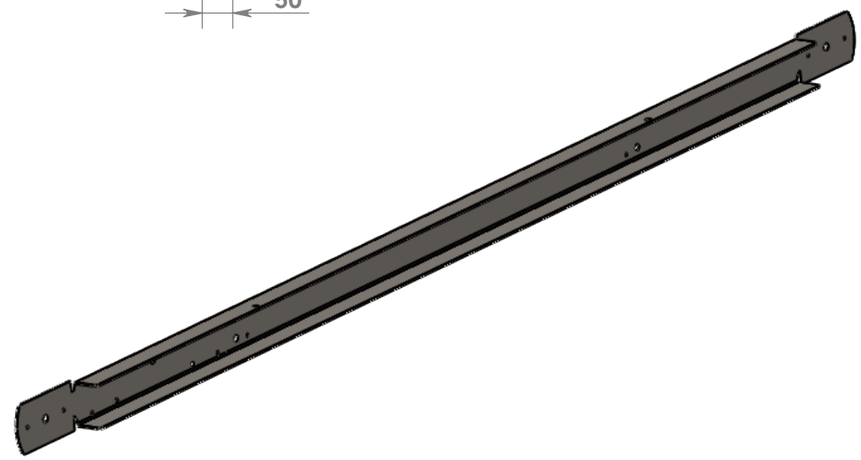

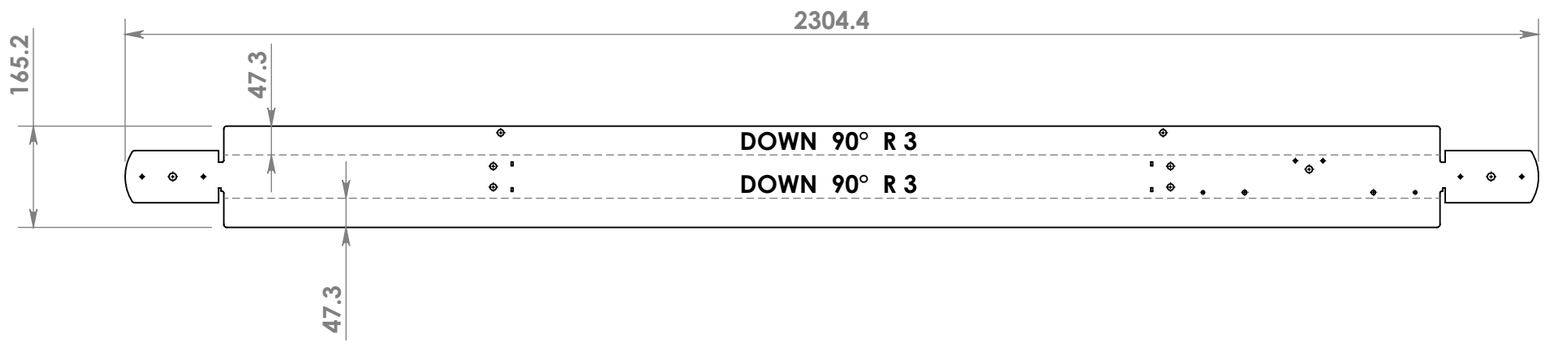

FlattPattern

SHEET METAL PROPERTIES	
THICKNESS (mm)	3
BEND RADIUS (mm)	6
BEND ALLOWANCE	0.4
BENDS	2
LENGTH (mm)	2304.4
WIDTH (mm)	165.2
AREA (mm^2)	352475.4
BLANK AREA(mm^2)	380674.6
CUTOUTS	23
OUTER CUT LENGTH (mm)	5050.7
INNER CUT LENGTH (mm)	23

PART No:	CV03-TR-21	REV: B	MASS	8.3 kg	THIRD ANGLE PROJECTION
DESCRIPTION:	76X50X3 CHANNEL 2000 D		PROCESS 1	LASERCUT	
MATERIAL:	MS PLATE GRADE 350		PROCESS 2	FOLDING	UNLESS OTHERWISE SPECIFIED: Linear Dimensions ± 0.5 mm Angular ± 0° 30'
FINISH:	N/A - N/A		PROCESS 3		

DO NOT SCALE DRAWING | Units: mm,Kg,deg

TinyMRP
www.tinymrp.com

SIZE: A3 | SHEET SCALE: 1:10 | 1 of 1