ITEM	PART NUMBER	DESCRIPTION	QTY.
1	CV03-F02	TRAILER FRAME	1
2	OEM-JOCKEYWHEEL	8" TRAILER JOCKEY WHEEL WITH UBOLTS	1
3	MUDGUARD	13" OR 14" WHEELS MUDGUARD	2
4	SUSPENSIONKIT-93IN	ADR 1000KG 93" TRAILER KIT SUSPENSION KIT	1
5	ADR-LED-IND	ADR REAR COMBINATION LAMP	2
6	ADR-REF-A	ADR ADHESIVE REFLECTOR AMBER	2
7	ADR-REF-W	ADR ADHESIVE REFLECTOR WHITE	4
8	R104-CMARK	R104 WHITE CONSPICUITY MARKING TAPE 50mm	1
9	ADR-HITCH	ADR 50mm BALL HITCH	1
10	ADR-REG-PLATE	ADR REGISTRATION PLATE	1
11	REGO PLATE LIGHT	ADR REGISTRATION PLATE LAMP	1
12	ADR-VIN-PLATE	VIN COMPLIANCE PLATE	1

REVISIONS			
ZONE	REV.	DESCRIPTION	DATE
	1	FOR QUOTATION	6/15/2024

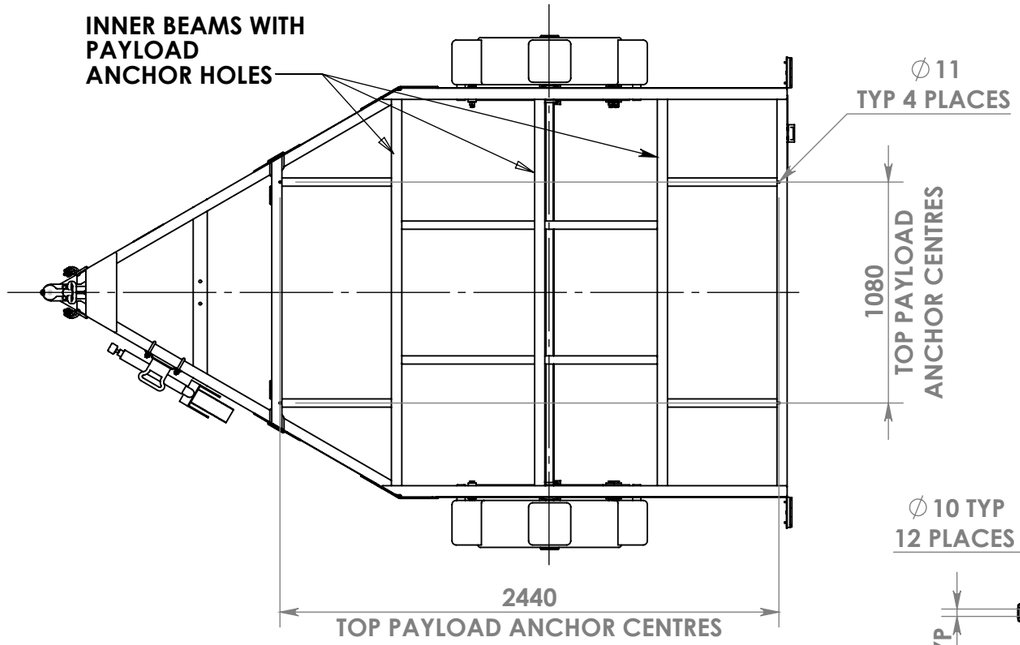

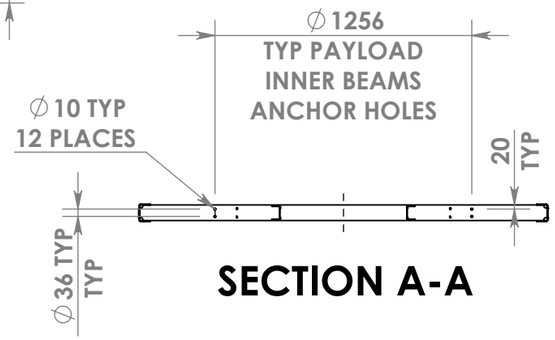

SECTION A-A

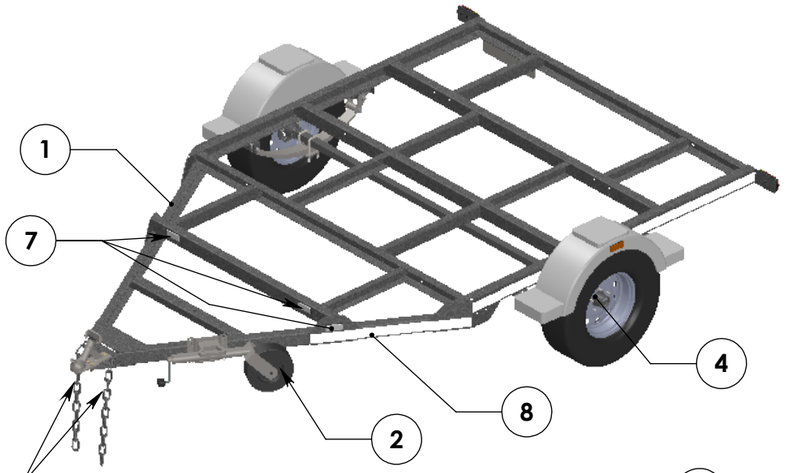

AS4177-35 10mm x 600mm SAFETY CHAIN (welded to frame)

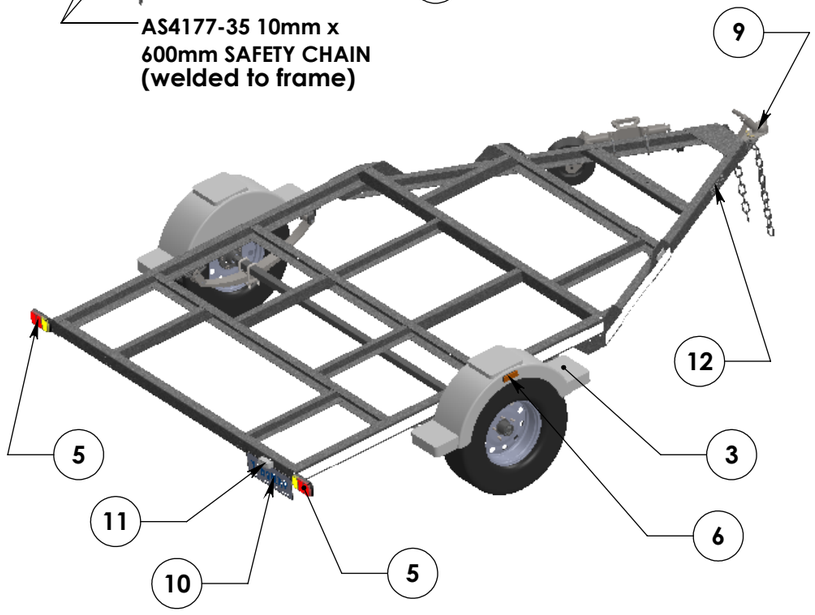

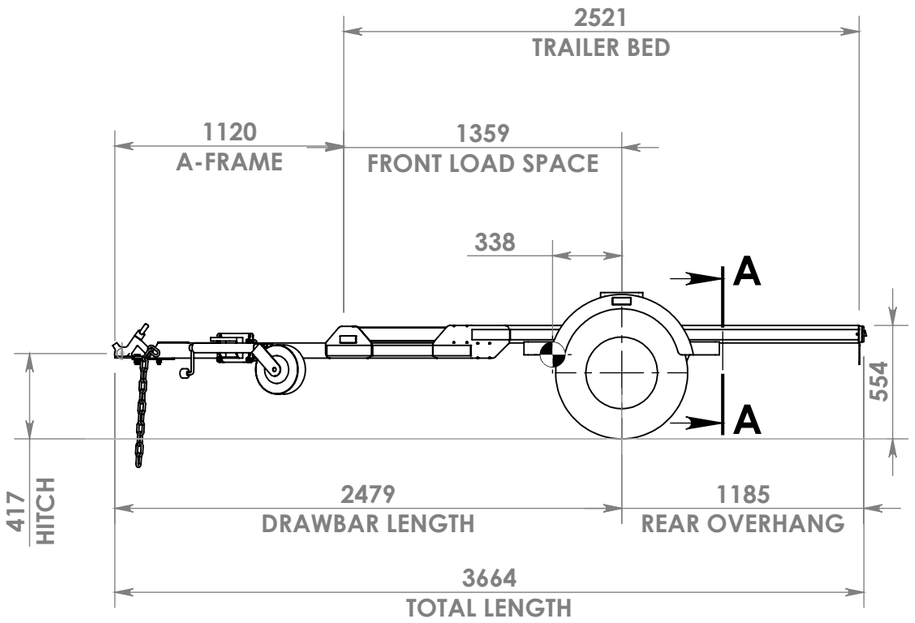

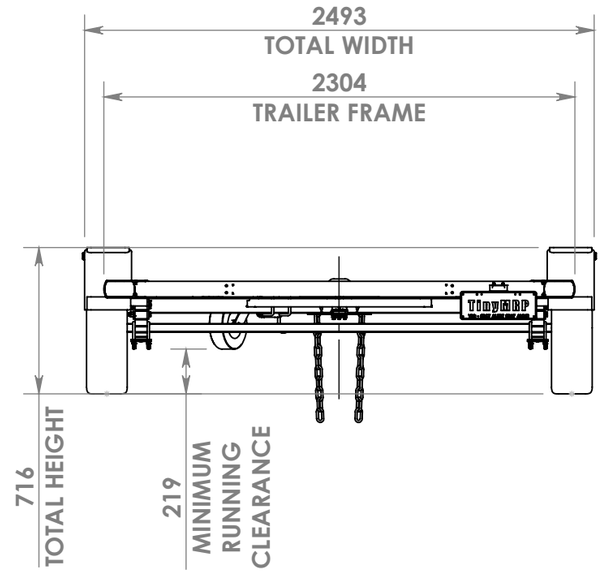

PART No:	CV03-TR-A01	REV: A	MASS	228.7 kg	THIRD ANGLE PROJECTION
DESCRIPTION:	CELLV03 TRAILER		PROCESS 1	ASSEMBLY	
MATERIAL:	350GR STEEL FABRICATION		PROCESS 2		UNLESS OTHERWISE SPECIFIED: Linear Dimensions ± 2 mm Angular ± 0° 30'
FINISH:	SPRAY - BLACK		PROCESS 3		

DO NOT SCALE DRAWING | Units: mm,Kg,deg

TinyMRP www.tinymrp.com

SIZE: A3 | SHEET SCALE: 1:30 | 1 of 2

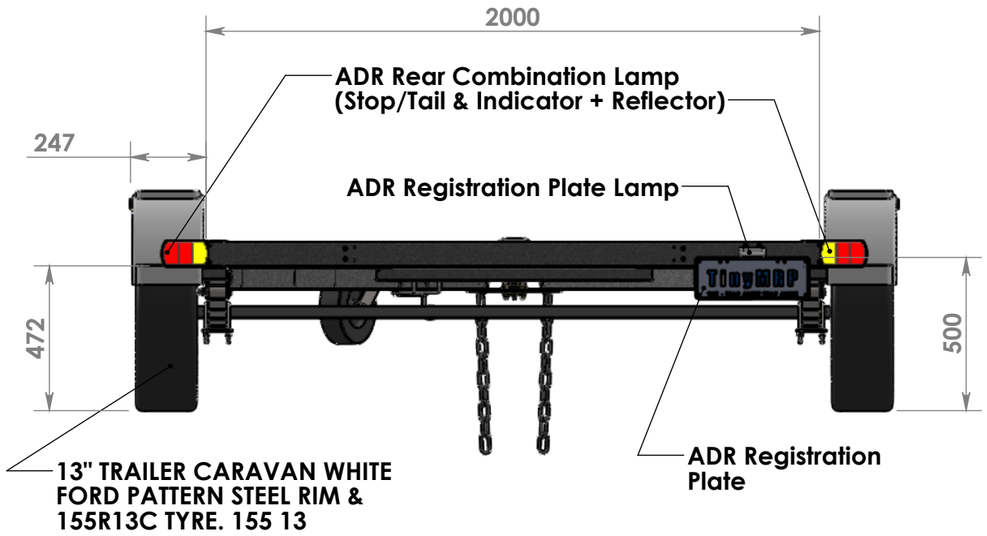

REAR VIEW

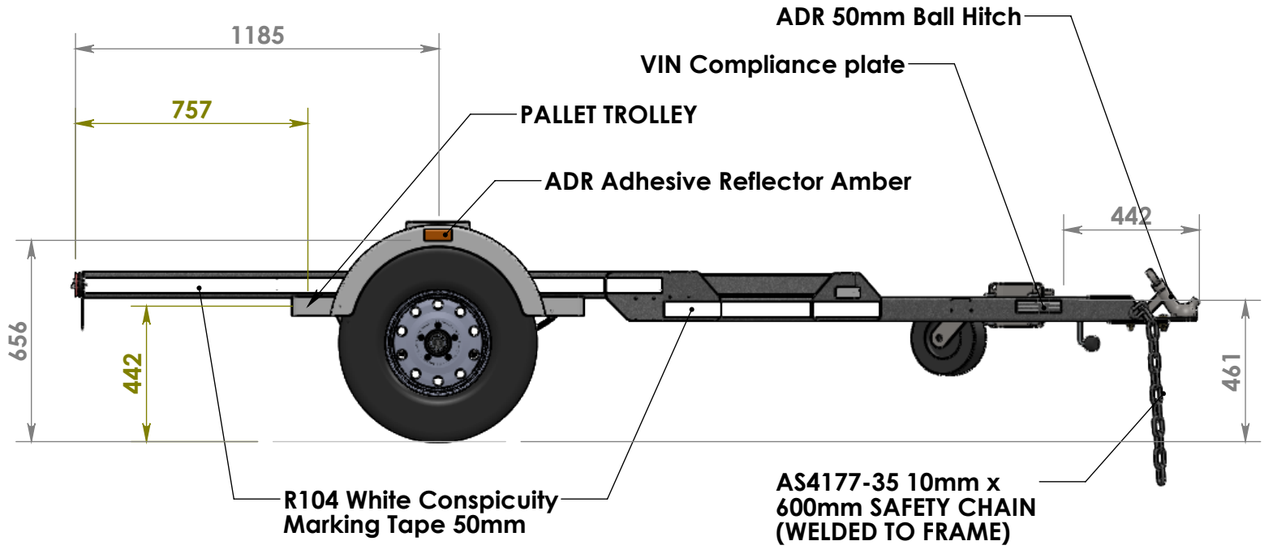

SIDE VIEW

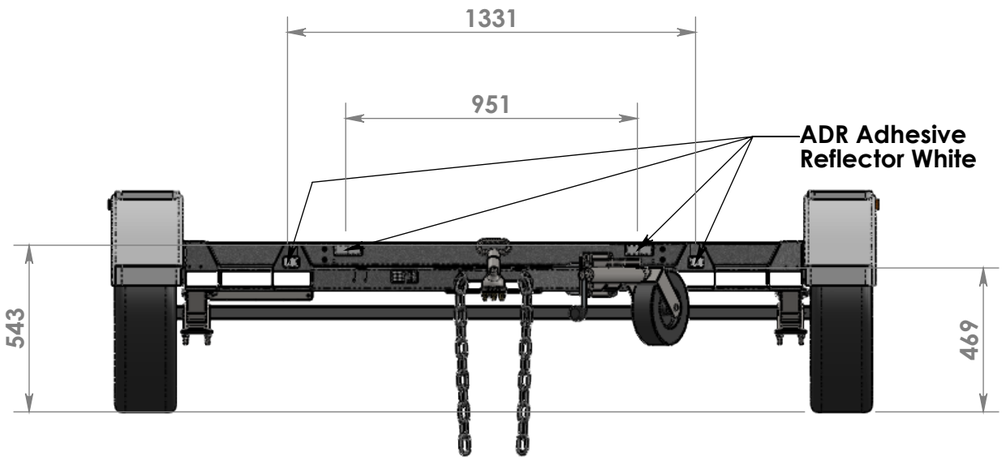

FRONT VIEW

PART No:	CV03-TR-A01	REV: A	MASS	228.7 kg	THIRD ANGLE PROJECTION	DO NOT SCALE DRAWING / Units: mm,Kg,deg
DESCRIPTION:	CELLV03 TRAILER		PROCESS 1	ASSEMBLY		TinyMRP www.tinymrp.com
MATERIAL:	350GR STEEL FABRICATION		PROCESS 2		UNLESS OTHERWISE SPECIFIED: Linear Dimensions ± 2 mm Angular ± 0° 30'	
FINISH:	SPRAY - BLACK		PROCESS 3			SIZE: A3 / SHEET SCALE: 1:20 / 2 of 2