REVISIONS			
ZONE	REV.	DESCRIPTION	DATE
	A	FOR QUOTATION	04/07/24

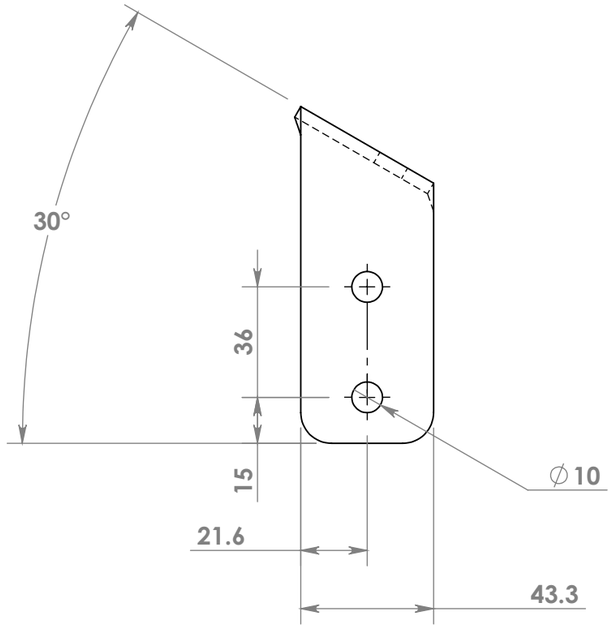

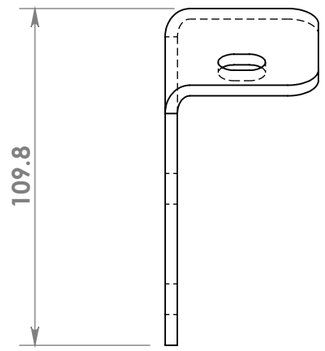

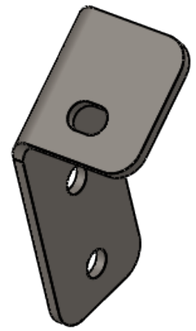

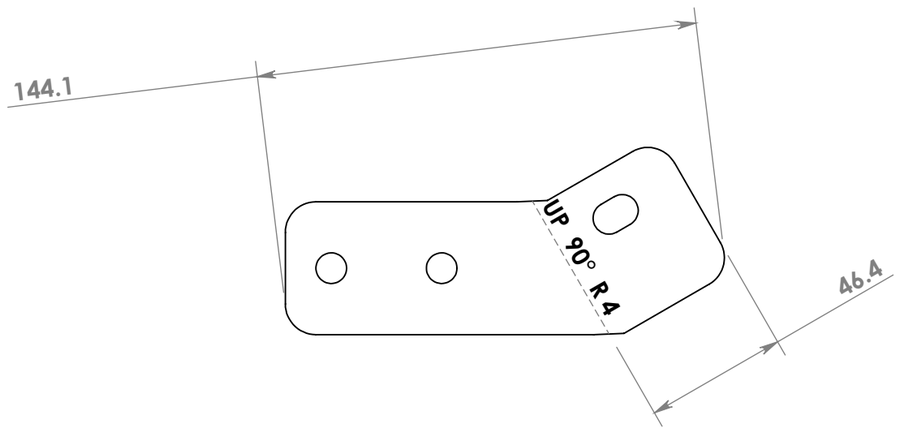

FlattPattern

SHEET METAL PROPERTIES	
THICKNESS (mm)	4
BEND RADIUS (mm)	4
BEND ALLOWANCE	0.4
BENDS	1
LENGTH (mm)	144
WIDTH (mm)	58.7
AREA (mm^2)	5971.8
BLANK AREA(mm^2)	8455.8
CUTOUTS	3
OUTER CUT LENGTH (mm)	356.1
INNER CUT LENGTH (mm)	3

PART No:	CV03-TR-B03	REV: A	MASS	0.2 kg	THIRD ANGLE PROJECTION
DESCRIPTION:	CELL BRACKET B		PROCESS 1	LASERCUT	
MATERIAL:	MS PLATE GRADE 350		PROCESS 2	FOLDING	UNLESS OTHERWISE SPECIFIED: Linear Dimensions ± 1 mm Angular ± 0° 30'
FINISH:	POWDERCOAT - BLACK		PROCESS 3		

DO NOT SCALE DRAWING | Units: mm,Kg,deg

TinyMRP
www.tinymrp.com

SIZE: A3 | SHEET SCALE: 1:2 | 1 of 1