ITEM	DRAWING No	DESCRIPTION	QTY.	MASS (kg)
1	OEM-15x10-RB	15NB x 10NB STEAM REDUCING BUSH	2	
2	J003435-154-1	80NB TESTING FLANGE 300 Lb	1	3
3	OEM-QR-15NB-M	QUICK RELEASE COUPLING MALE x 1/2" BSPP FEMALE	2	

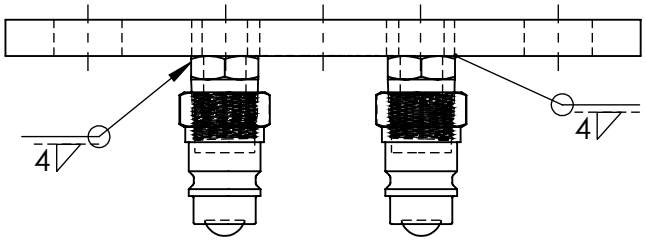

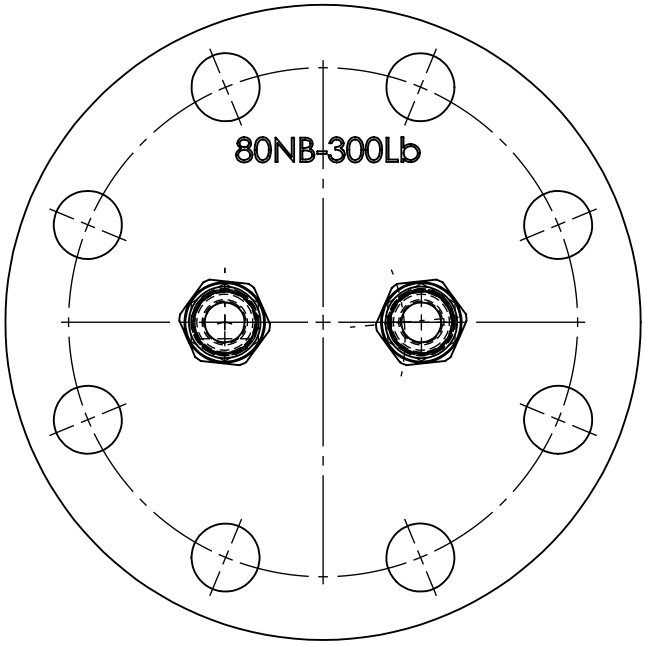

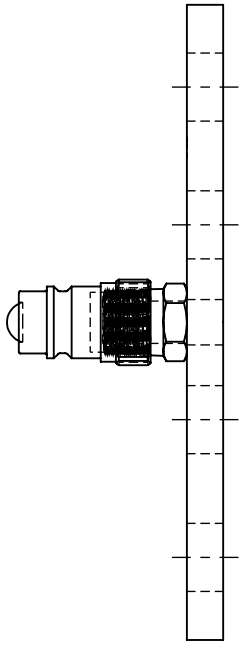

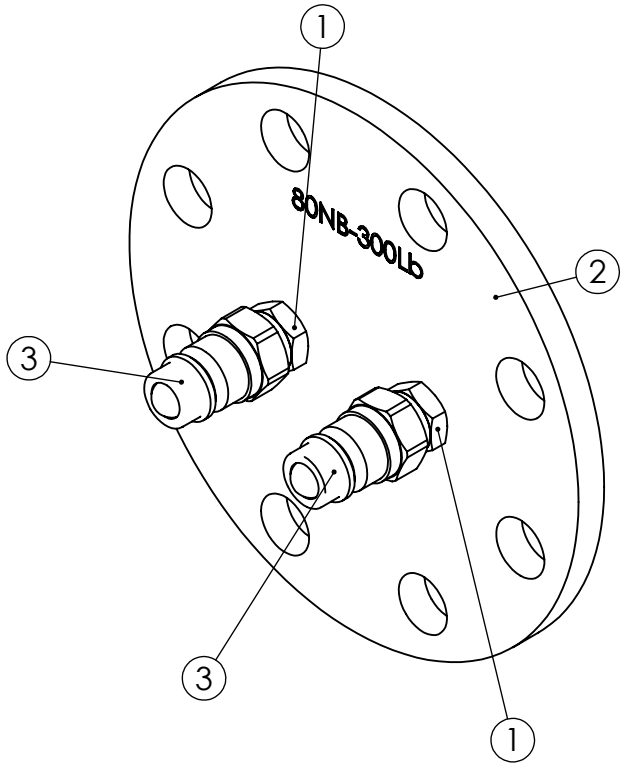

UNLESS OTHERWISE SPECIFIED: TOLERANCES: MACHINE + / - 0.25mm FABRICATION + / - 1.0 mm

DIMENSIONS IN MILLIMETRES

THIS DRAWING IS THE PROPERTY OF MECHANICAL ENGINEERING & CAD SERVICES (MECS) Pty Ltd & MUST NOT BE MANUFACTURED FROM,COPIED OR TRANSMITTED TO A THIRD PARTY WITHOUT THE PRIOR APPROVAL FROM MECHANICAL ENGINEERING & CAD SERVICES (MECS) Pty Ltd

MECS
Mechanical Engineering & CAD Services
11 Campbell Place WAGGA NSW 2650
Ph: - 0409 985 816
Email: nick@mecservices.com.au

THIRD ANGLE PROJECTION

WEIGHT: kg

CLIENT

RODDY ENGINEERING
14 Waratah St TUMUT NSW 2720
Ph: - 02 6947 4039
Email: roddyeng.com.au

TITLE: 80NB- 300 Lb TEST FLANGE ASSEMBLY

DWG NO.	REV	
J003435-154		A4

DRAWN N DE BRUYN DATE 10/04/2024 SCALE:1:2.5 SHEET 1 OF 1