| ITEM | DRAWING No | DESCRIPTION | QTY. | MASS (kg) |
|---|---|---|---|---|
| 1 | OEM-15x10-RB | 15NB x 10NB STEAM REDUCING BUSH | 2 | |
| 2 | J003435-156-1 | 80NB TESTING FLANGE JIS30K | 1 | 3 |
| 3 | OEM-QR-15NB-M | QUICK RELEASE COUPLING MALE x 1/2" BSPP FEMALE | 2 | |

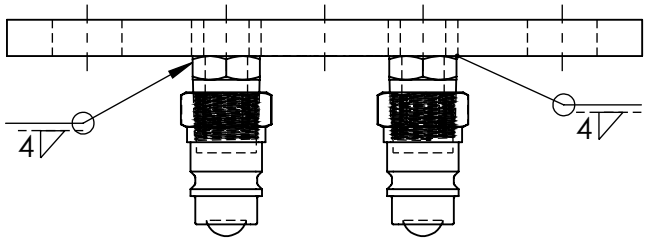


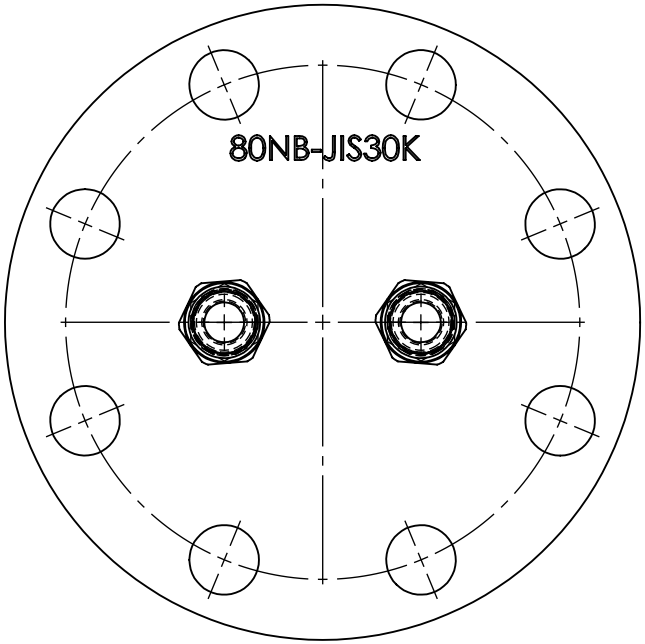


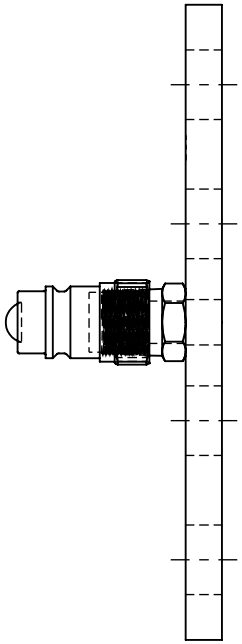

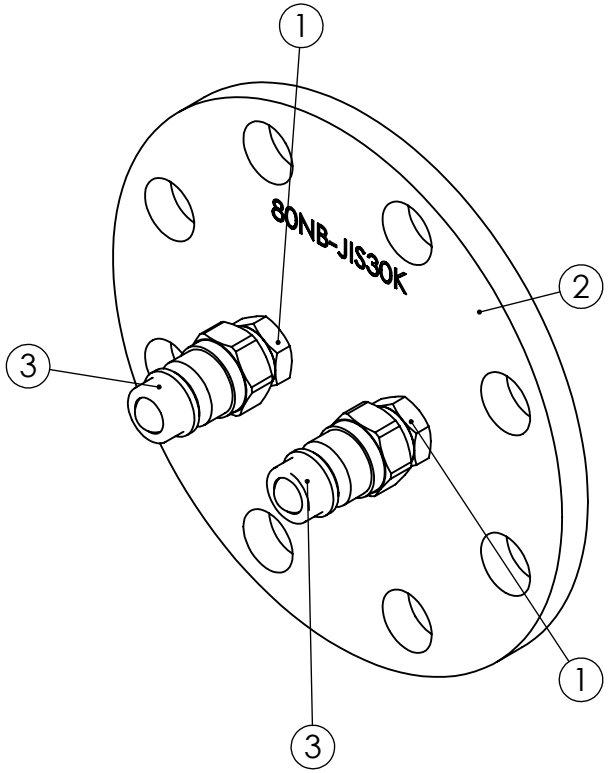


**MATERIAL:-**

UNLESS OTHERWISE SPECIFIED: TOLERANCES: MACHINE + / - 0.25mm FABRICATION + / - 1.0 mm

DIMENSIONS IN MILLIMETRES

THIS DRAWING IS THE PROPERTY OF MECHANICAL ENGINEERING & CAD SERVICES (MECS) Pty Ltd & MUST NOT BE MANUFACTURED FROM,COPIED OR TRANSMITTED TO A THIRD PARTY WITHOUT THE PRIOR APPROVAL FROM MECHANICAL ENGINEERING & CAD SERVICES (MECS) Pty Ltd

MECS
Mechanical Engineering & CAD Services
11 Campbell Place WAGGA NSW 2650
Ph: - 0409 985 816
Email: nick@mecservices.com.au

THIRD ANGLE PROJECTION

WEIGHT: kg

CLIENT

RODDY ENGINEERING
14 Waratah St TUMUT NSW 2720
Ph: - 02 6947 4039
Email: roddyeng.com.au

TITLE: 80NB- JIS30K TEST FLANGE ASSEMBLY

| DWG NO. | REV | |
|---|---|---|
| J003435-156 | | A4 |

DRAWN N DE BRUYN DATE 10/04/2024 SCALE:1:2.5 SHEET 1 OF 1