ITEM	DRAWING No	DESCRIPTION	QTY.	MASS (kg)
1	OEM-HC	HOSE CONNECTOR	1	0
2	OEM-15NB-NP	15NB POLY NIPPLE	1	0.050
3	OEM-15NB-HP-N	15NB HYDRAULIC NIPPLE 1/2" BSPT x 1/2" BSPT	1	0.053
4	OEM-15NB-HP-BV	15NB x 1/2" BSPP HIGH PRESSURE BALL VALVE	1	
5	OEM-QR-15NB-F	QUICK REALEASE COUPLING FEMALE x 1/2" BSPP FEMALE	1	

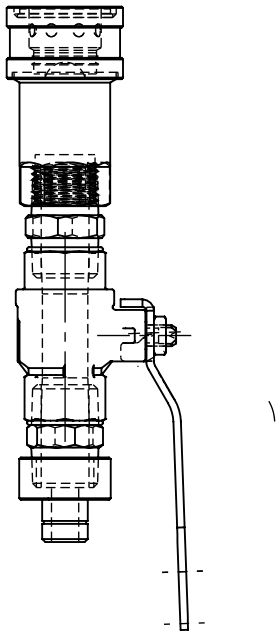

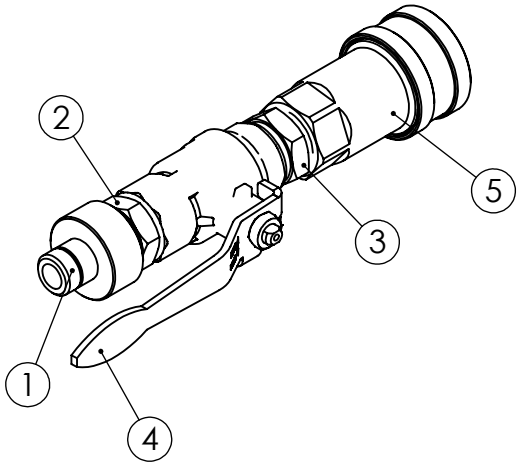

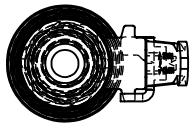

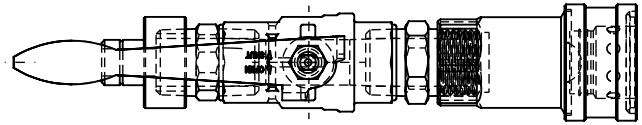

UNLESS OTHERWISE SPECIFIED: TOLERANCES: MACHINE + / - 0.25mm FABRICATION + / - 1.0 mm

DIMENSIONS IN MILLIMETRES

THIS DRAWING IS THE PROPERTY OF MECHANICAL ENGINEERING & CAD SERVICES (MECS) Pty Ltd & MUST NOT BE MANUFACTURED FROM,COPIED OR TRANSMITTED TO A THIRD PARTY WITHOUT THE PRIOR APPROVAL FROM MECHANICAL ENGINEERING & CAD SERVICES (MECS) Pty Ltd

MECS
Mechanical Engineering & CAD Services
11 Campbell Place WAGGA NSW 2650
Ph: - 0409 985 816
Email: nick@mecservices.com.au

THIRD ANGLE PROJECTION

WEIGHT: kg

CLIENT

RODDY ENGINEERING
14 Waratah St TUMUT NSW 2720
Ph: - 02 6947 4039
Email: roddyeng.com.au

TITLE: PIPE FILLING VALVING

DWG NO. J003435-160

REV

A4

DRAWN N DE BRUYN

DATE 10/04/2024

SCALE:1:2.5

SHEET 1 OF 1