ITEM	DRAWING No	DESCRIPTION	QTY.	MASS (kg)
1	OEM-MY-3_4x28	3/4" DIA MYLAR INSULATION SLEEVE 28 LONG	4	0
2	OEM-2925-SHL	80NB VALVE 2925	1	32
3	OEM-2924-SHL	80NB VALVE 2924	1	32
4	OEM-2904-SHL-1	VALVE 2904 MACHINED	1	17
5	OEM-347-N-70	ORING SIZE 347 NITRILE SHORE 70	1	0
6	OEM-80NB-JIS30K-3	80NB JIS30K 3.0mm C-4430 GASKET	1	0.1
7	OEM-80NB-300-15	80NB 300LB 1.5mm C-4400 GASKET	2	0
8	OEM-40NB-300-3	40NB 300 Lb 3.0 mm C-4430 GASKET	1	0.0
9	OEM-40NB-300-15	40NB 300 Lb 1.5mm C-4400 GASKET	3	0.1
10	11-2925	UNIT 11 VALVE 2925 DOWN STREAM PIPE ASSEMBLY	1	13
11	11-2904-1	UNIT 11 VALVE 2904 DOWN STREAM PIPE 1	1	22
12	11-2904-3	UNIT 11 VALVE 2904 DOWN STREAM PIPE 3	1	17
13	11-2904-2	UNIT 11 VALVE 2904 DOWN STREAM PIPE 2	1	19

ITEM	DRAWING No	DESCRIPTION	QTY.	MASS (kg)
14	3-4_UNC-AT-95	3/4 UNC ALL THREAD Gr 8 x 95 LONG	8	0
15	3-4_UNC-AT-75	3/4 UNC ALL THREAD Gr 8 x 75 LONG	4	0
16		3/4" G10 EXPOY FLAT WASHER	12	
17		3/4" DIA MYLAR INSULATION SLEEVE 37 LONG	8	0
18		3/4" HIGH TENSILE FLAT WASHER	12	
19		3/4" UNC HEX NUT ZINC PLATED	12	0.1
20		M20 FLAT WASHER 304 S/S	36	0.01
21		M20 FLAT WASHER 304 S/S (37x22x2)	36	
22		M20x2.5 x 90 HEX BOLT 304 S/S	32	0.3
23		M20x2.5 NUT 304 S/S	36	
24		M20x2.5 x 70 HEX BOLT 304 S/S	4	0.3

RED EYE QR CODE AREA

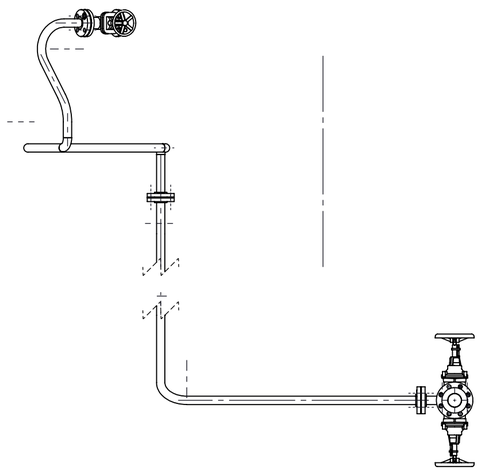

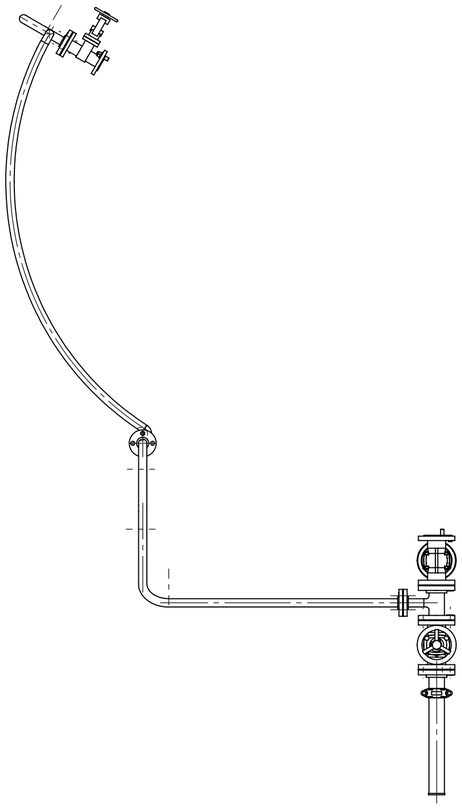

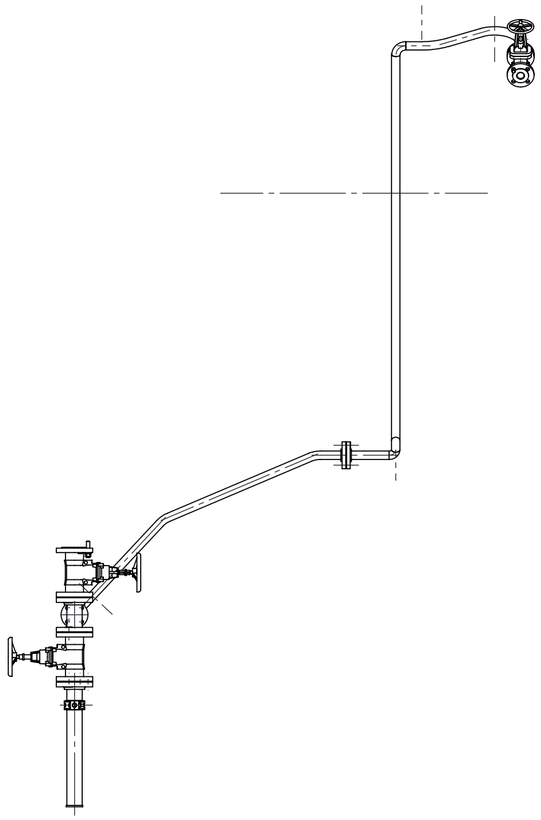

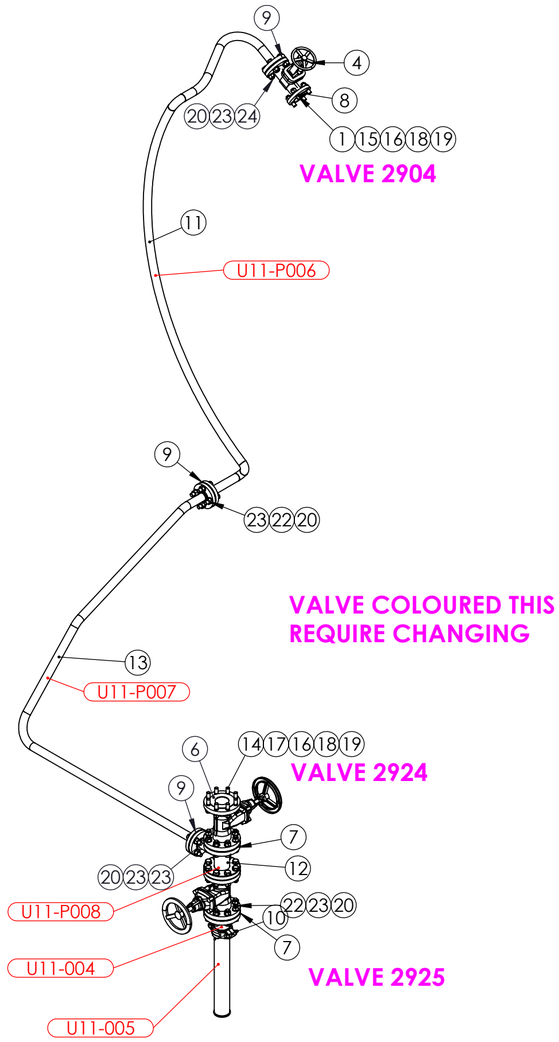

AS INSTALLED 14/3/25

UNIT 11 VALVES 2904 & 2905 PIPE ASSEMBLY WEIGHT - 170 kg

REV	NAME & DATE	DESCRIPTION

UNLESS OTHERWISE SPECIFIED:
TOLERANCES: MACHINE + / - 0.25mm
FABRICATION + / - 1.0 mm

THIS DRG SUPPLIED BY
RODDY ENGINEERING
14 Waratah St, TUMUT NSW 2720
Ph: 02 6947 4039

DRAWING No. J003435-30 REV:

DRAWN N DE BRUYN 28/03/2024
DRAWING CHECKED
DESIGNED
DESIGN CHECKED
SCALE 1:25
WORK ORDER No
APPROVED
SECTION No/KKS
A2 SHEET SIZE

snowyhydro LIMITED

M2 POWER STATION UNIT 11
VALVES 2904 & 2905 PIPE ASSEMBLY

SMA-DRG-NO

REV

SHEET 1 OF 7