DIMENSIONS IN MILLIMETRES

ITEM NO.	DESCRIPTION	LENGTH	MATERIAL	MASS (kg)
1	114x6.0 CHS	4304	316L STAINLESS STEEL	70.30

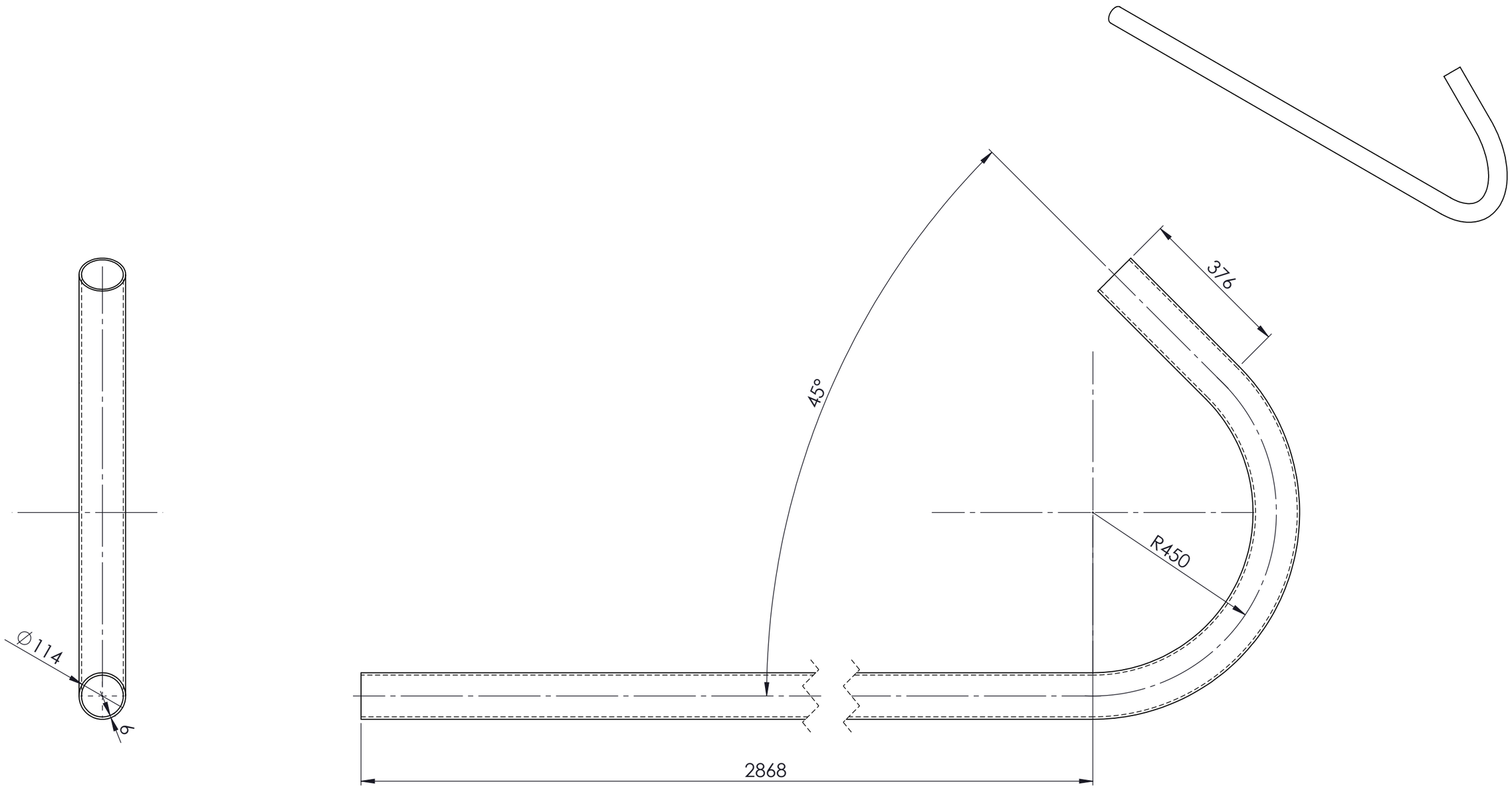

MATERIAL:- 316L STAINLESS STEEL

100NB SHED 40 PIPE VALVE 2921 PIPE 1 70.30kg - WEIGHT

UNLESS OTHERWISE SPECIFIED: TOLERANCES: MACHINE + / - 0.25mm FABRICATION + / - 1.0 mm

DIMENSIONS IN MILLIMETRES

THIS DRAWING IS THE PROPERTY OF MECHANICAL ENGINEERING & CAD SERVICES (MECS) Pty Ltd & MUST NOT BE MANUFACTURED FROM,COPIED OR TRANSMITTED TO A THIRD PARTY WITHOUT THE PRIOR APPROVAL FROM MECHANICAL ENGINEERING & CAD SERVICES (MECS) Pty Ltd

MECS
Mechanical Engineering & CAD Services
11 Campbell Place WAGGA NSW 2650
Ph: - 0409 985 816
Email: nick@mecservices.com.au

THIRD ANGLE PROJECTION

CLIENT
RODDY ENGINEERING
14 Waratah St TUMUT NSW 2720
Ph: - 02 6947 4039
Email: roddyeng.com.au

TITLE: 100NB SHED 40 PIPE VALVE 2921 PIPE 1

DWG NO. J003435-52 REV A3

DRAWN N DE BRUYN DATE 18/03/2024 SCALE:1:10 SHEET 1 OF 1