REVISIONS			
REV.	DESCRIPTION	DATE	APPROVED
A	MODIFIED TO SUIT 13	9/01/2026	NDB

DIMENSIONS IN MILLIMETRES

ITEM NO.	DESCRIPTION	LENGTH	MATERIAL	MASS (kg)
1	60x2.8 CHS	2719	316L STAINLESS STEEL	11.00

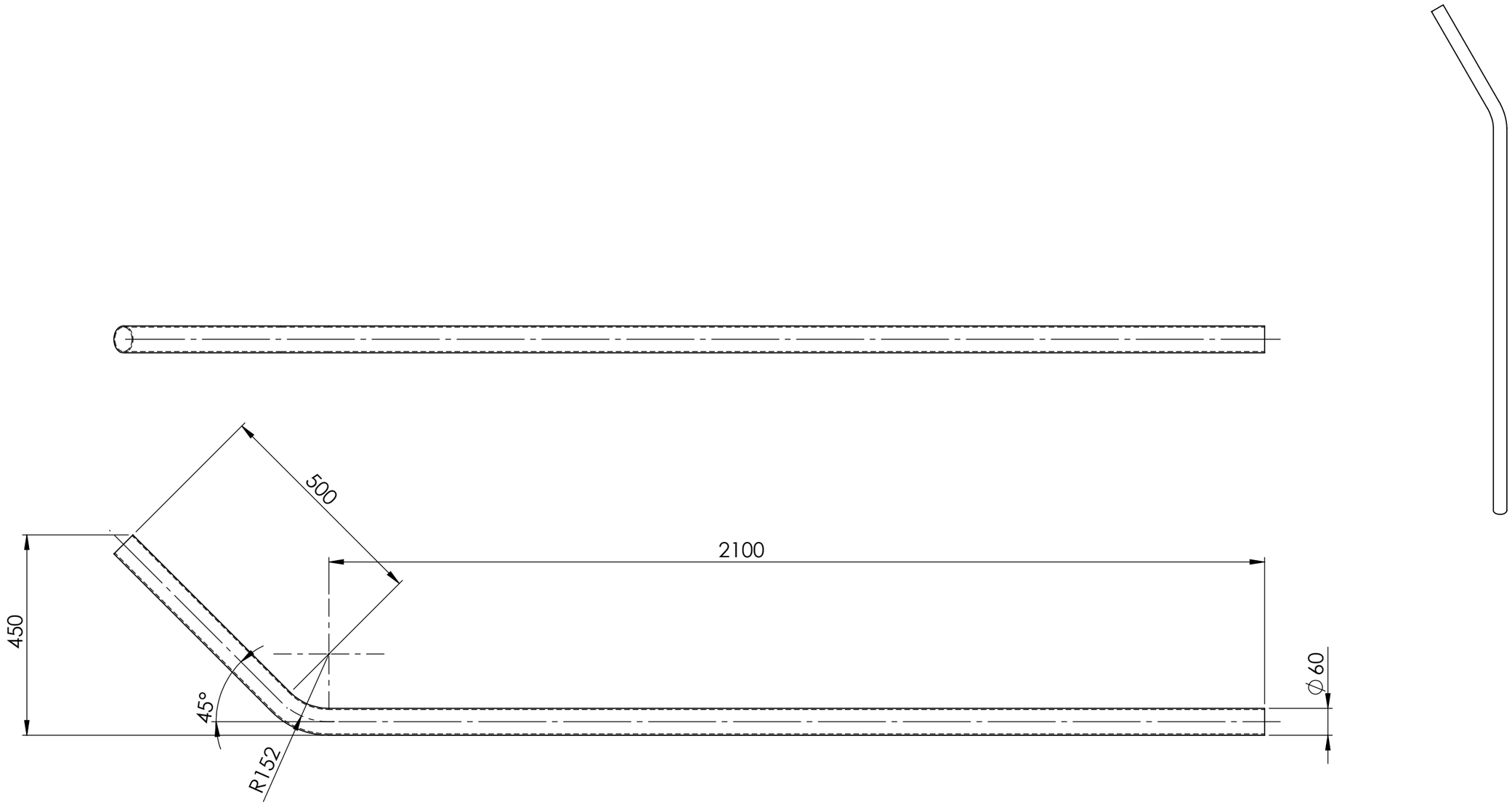

MATERIAL:- 316L STAINLESS STEEL

50NB SHED 10 PIPE 316 SS VALVE 2906 WEIGHT - 11.00 kg

UNLESS OTHERWISE SPECIFIED: TOLERANCES: MACHINE + / - 0.25mm FABRICATION + / - 1.0 mm

DIMENSIONS IN MILLIMETRES

THIS DRAWING IS THE PROPERTY OF MECHANICAL ENGINEERING & CAD SERVICES (MECS) Pty Ltd & MUST NOT BE MANUFACTURED FROM,COPIED OR TRANSMITTED TO A THIRD PARTY WITHOUT THE PRIOR APPROVAL FROM MECHANICAL ENGINEERING & CAD SERVICES (MECS) Pty Ltd

MECS
Mechanical Engineering & CAD Services
11 Campbell Place WAGGA NSW 2650
Ph: - 0409 985 816
Email: nick@mecservices.com.au

THIRD ANGLE PROJECTION

CLIENT
RODDY ENGINEERING
14 Waratah St TUMUT NSW 2720
Ph: - 02 6947 4039
Email: roddyeng.com.au

TITLE: 50NB SHED 10 PIPE 316 SS VALVE 2906

DWG NO. J003435-66A | REV A | A3

DRAWN N DE BRUYN | DATE 29/03/2024 | SCALE:1:10 | SHEET 1 OF 1