ITEM NO.	DESCRIPTION	LENGTH	MATERIAL	MASS (kg)
1	114x6.0 CHS	1049	316L STAINLESS STEEL	17

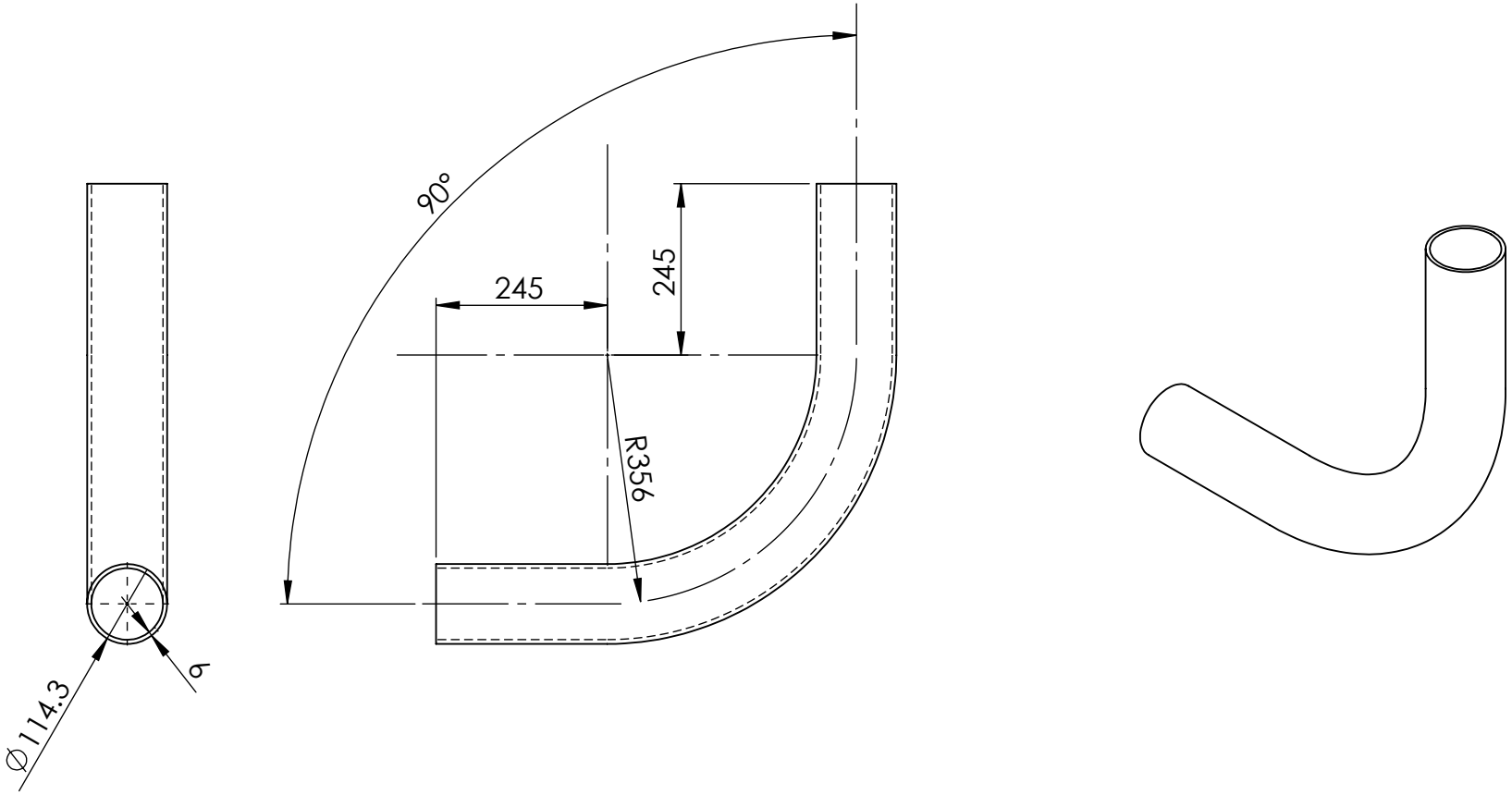

MATERIAL:- 316L STAINLESS STEEL

UNLESS OTHERWISE SPECIFIED: TOLERANCES: MACHINE + / - 0.25mm FABRICATION + / - 1.0 mm

DIMENSIONS IN MILLIMETRES

THIS DRAWING IS THE PROPERTY OF MECHANICAL ENGINEERING & CAD SERVICES (MECS) Pty Ltd & MUST NOT BE MANUFACTURED FROM,COPIED OR TRANSMITTED TO A THIRD PARTY WITHOUT THE PRIOR APPROVAL FROM MECHANICAL ENGINEERING & CAD SERVICES (MECS) Pty Ltd

MECS
Mechanical Engineering & CAD Services
11 Campbell Place WAGGA NSW 2650
Ph: - 0409 985 816
Email: nick@mecservices.com.au

THIRD ANGLE PROJECTION

WEIGHT: 17 kg

CLIENT

RODDY ENGINEERING
14 Waratah St TUMUT NSW 2720
Ph: - 02 6947 4039
Email: roddyeng.com.au

TITLE: 100NB SHED 40 PIPE x 90 DEGREE BEND 356R

DWG NO.	REV	
J003435-67-15		A4

DRAWN	DATE	SCALE	SHEET
N DE BRUYN	9/06/2024	1:10	1 OF 1