DIMENSIONS IN MILLIMETRES

ITEM NO.	DESCRIPTION	LENGTH	MATERIAL	MASS (kg)
1	89x5.5 CHS	3455	316L STAINLESS STEEL	39.83

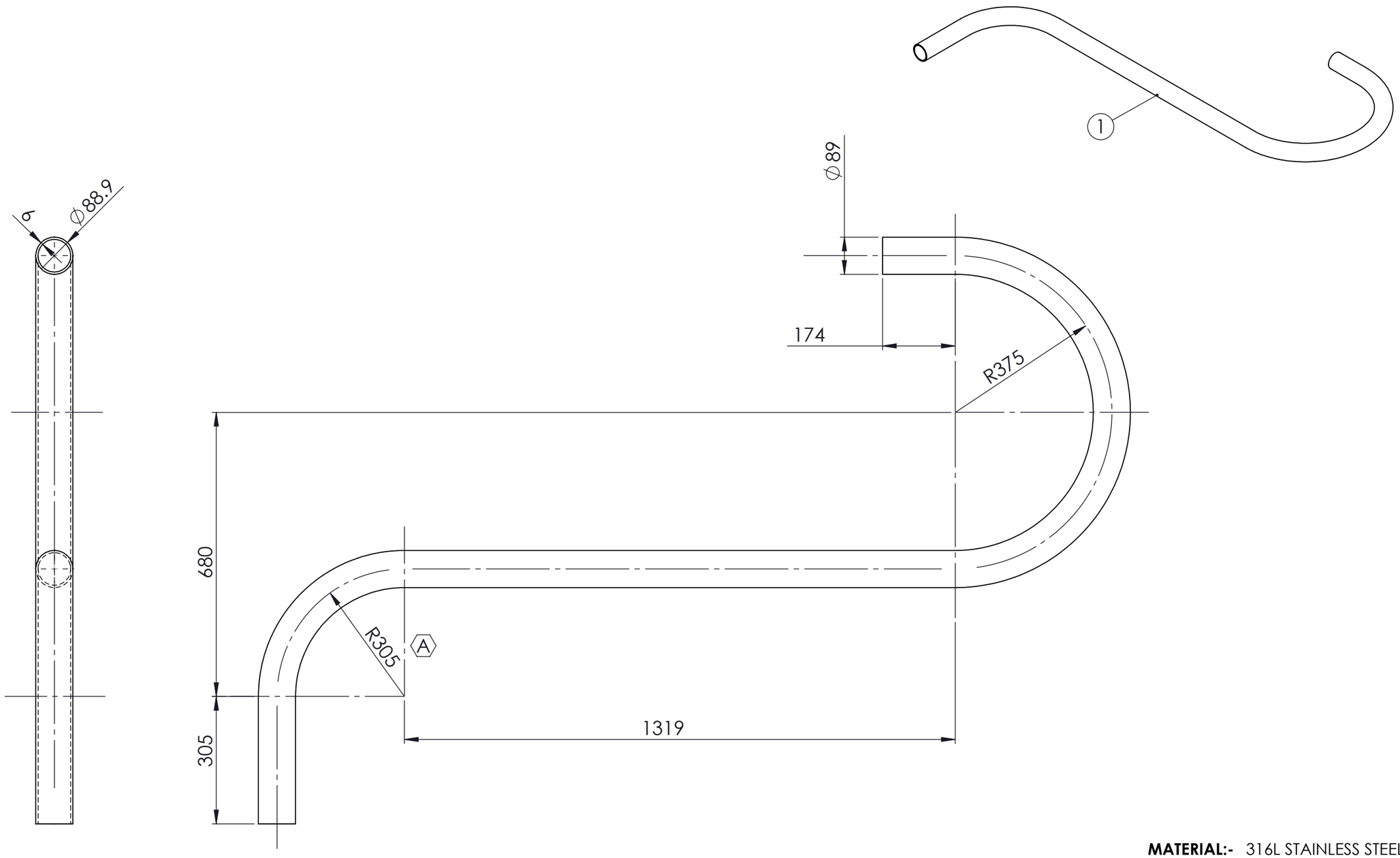

MATERIAL:- 316L STAINLESS STEEL

80NB SHED 40 PIPE VALVE 2931A PIPE 5 WEIGHT - 39.83 kg

REVISIONS

REV.	DESCRIPTION	DATE	APPROVED
A	RADIUS WAS 375	2/07/2024	NDB

UNLESS OTHERWISE SPECIFIED: TOLERANCES: MACHINE + / - 0.25mm FABRICATION + / - 1.0 mm

DIMENSIONS IN MILLIMETRES

THIS DRAWING IS THE PROPERTY OF MECHANICAL ENGINEERING & CAD SERVICES (MECS) Pty Ltd & MUST NOT BE MANUFACTURED FROM,COPIED OR TRANSMITTED TO A THIRD PARTY WITHOUT THE PRIOR APPROVAL FROM MECHANICAL ENGINEERING & CAD SERVICES (MECS) Pty Ltd

MECS
Mechanical Engineering & CAD Services
11 Campbell Place WAGGA NSW 2650
Ph: - 0409 985 816
Email: nick@mecservices.com.au

THIRD ANGLE PROJECTION

CLIENT

RODDY ENGINEERING
14 Waratah St TUMUT NSW 2720
Ph: - 02 6947 4039
Email: roddyeng.com.au

TITLE: 80NB SHED 40 PIPE VALVE 2931A PIPE 5

DWG NO. J003435-68A REV A A3

DRAWN N DE BRUYN DATE 18/03/2024 SCALE:1:10 SHEET 1 OF 1