ITEM	DRAWING No	DESCRIPTION	QTY.	MASS (kg)
1	OEM-EN-M12-ZP	M12 EYE NUT ZINC PLATED	2	0.1
2	J004232-201-1	VALVE 2450 & 2452 SCISSOR LIFTING FRAME	1	43
3		M12 ZP FLAT WASHER	2	0.01
4		M12x1.75 x 65 HEX BOLT Gr 8.8 ZP	2	0.1

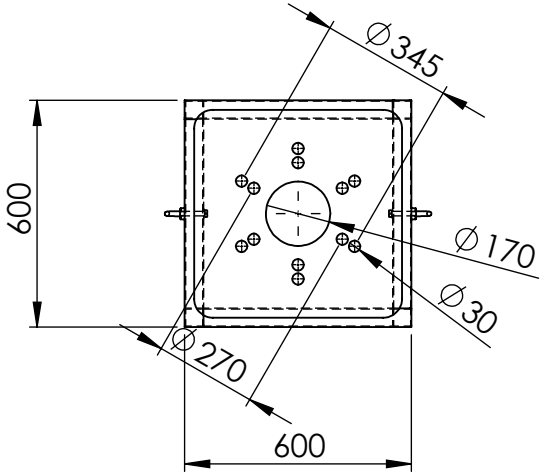

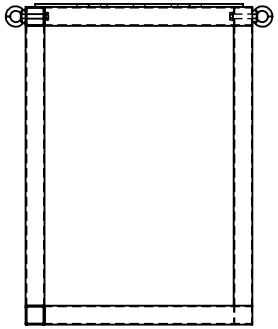

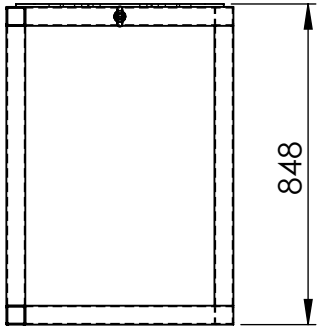

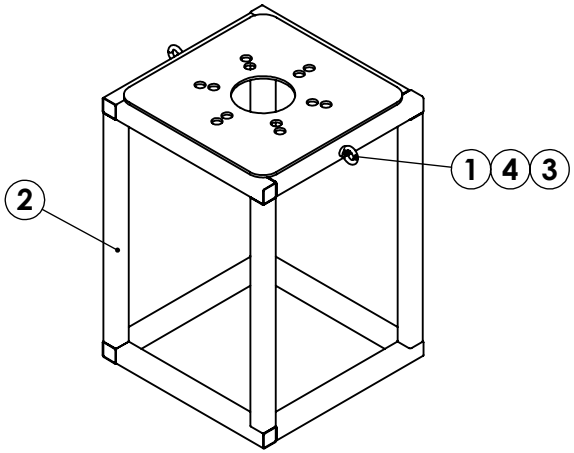

UNLESS OTHERWISE SPECIFIED: TOLERANCES: MACHINE + / - 0.25mm FABRICATION + / - 1.0 mm

DIMENSIONS IN MILLIMETRES

THIS DRAWING IS THE PROPERTY OF MECHANICAL ENGINEERING & CAD SERVICES (MECS) Pty Ltd & MUST NOT BE MANUFACTURED FROM,COPIED OR TRANSMITTED TO A THIRD PARTY WITHOUT THE PRIOR APPROVAL FROM MECHANICAL ENGINEERING & CAD SERVICES (MECS) Pty Ltd

MECS
Mechanical Engineering & CAD Services
11 Campbell Place WAGGA NSW 2650
Ph: - 0409 985 816
Email: nick@mecservices.com.au

THIRD ANGLE PROJECTION

WEIGHT: kg

CLIENT

RODDY ENGINEERING
14 Waratah St TUMUT NSW 2720
Ph: - 02 6947 4039
Email: roddyeng.com.au

TITLE: VALVE 2450 & 2452 SCISSOR LIFTING FRAME ASSY

DWG NO. J004232-201 | A4

DRAWN N DE BRUYN | DATE 2/10/2025 | SCALE:1:20 | SHEET 1 OF 1