ITEM NO.	DESCRIPTION	LENGTH	QTY	MASS (kg)
1	75 x 75 x 3 DURAGAL SHS	950	2	6.19
2	75 x 75 x 3 DURAGAL SHS	2320	1	15.12
3	75 x 75 x 3 DURAGAL SHS	2860	1	18.14
4	75 x 75 x 3 DURAGAL SHS	1320	1	8.60
5	75 x 75 x 3 DURAGAL SHS	2230	1	14.54
6	125x75x3 DURAGAL RHS	2470	1	20.86
7	75 x 75 x 3 DURAGAL SHS	2860	1	18.14
8	75 x 75 x 3 DURAGAL SHS	1025	2	6.44
9	75 x 75 x 3 DURAGAL SHS	950	1	6.19
10	75 x 75 x 3 DURAGAL SHS	1025	2	6.44
11	125x75x3 DURAGAL RHS	2860	1	24.32
12	125x75x3 DURAGAL RHS	2470	1	20.86
13	125x75x3 DURAGAL RHS	2860	1	24.33
14	75 x 75 x 3 DURAGAL SHS	2220	4	14.47

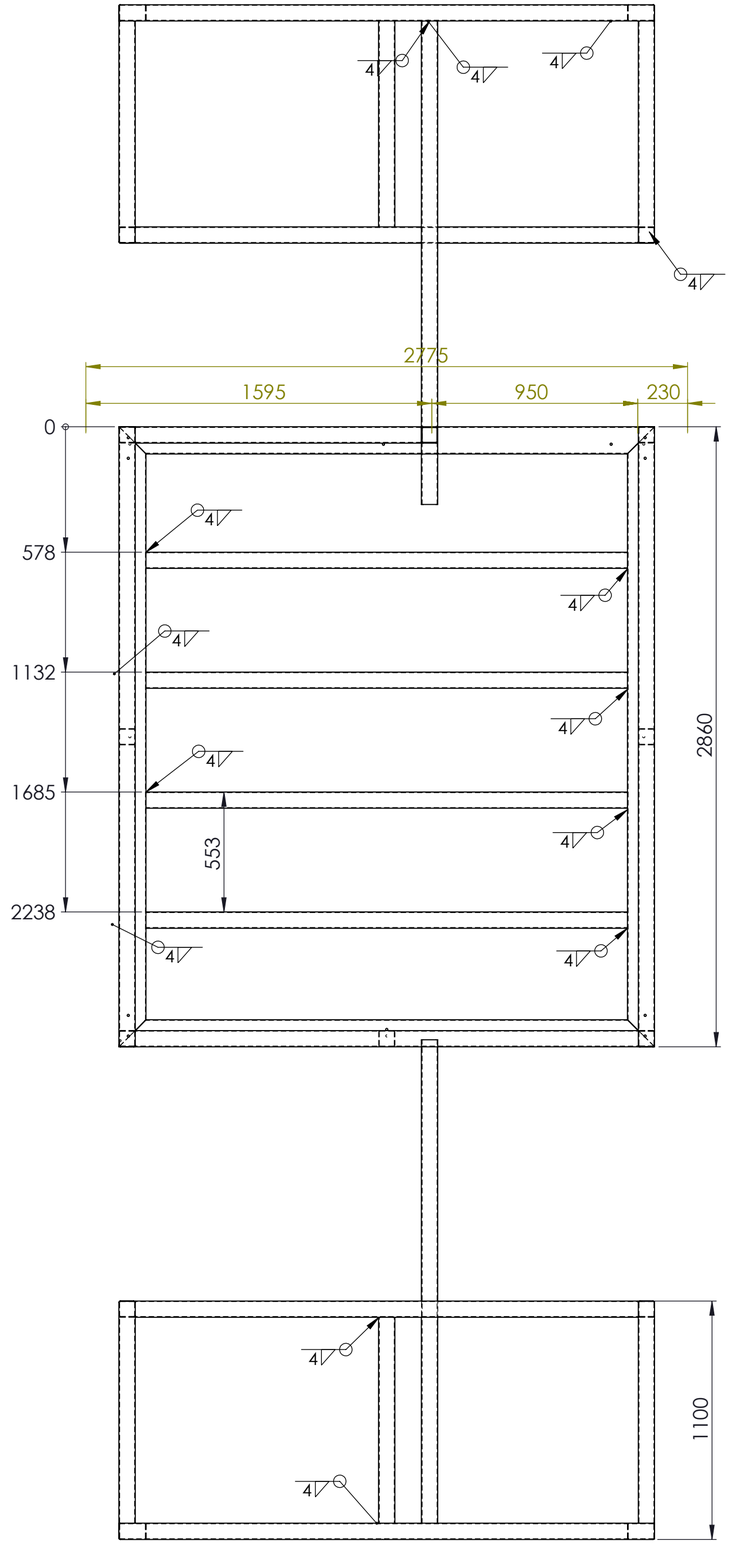

FOR INFORMATION ONLY
DO NOT MANUFACTURE

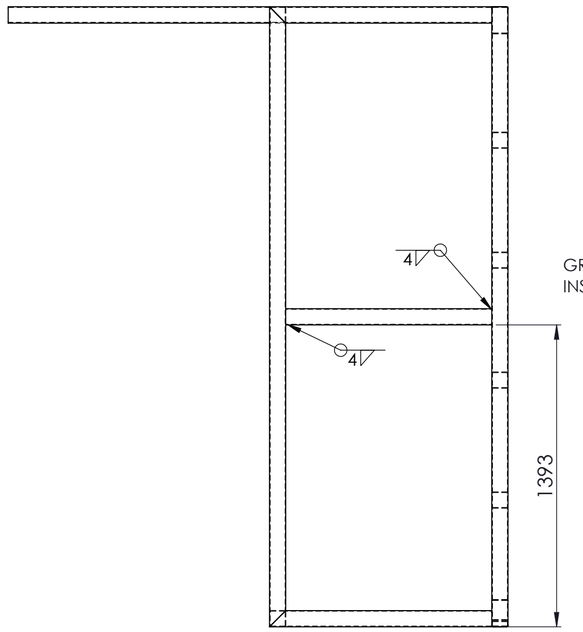

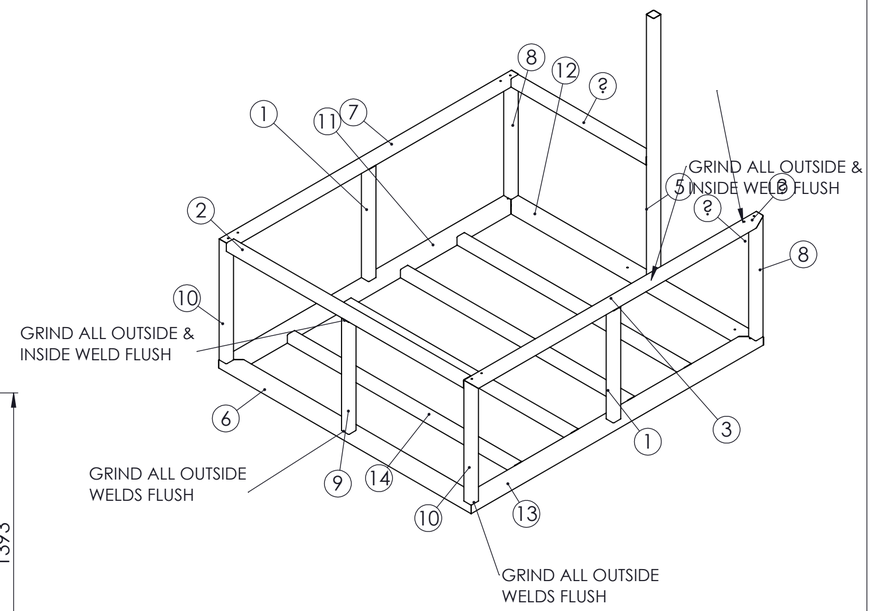

FOR INFORMATION ONLY
DO NOT MANUFACTURE

NOTES - UNO
ALL FILLET WELDS SHALL BE 6MM CONTINUOUS
ALL BUTT WELDS SHALL BE FULL PENETRATION
ALL WELDS, CUTS AND HOLES SHALL BE TREATED WITH 2 COATS OF ZINC RICH PRIMER

FLOOR FRAMING WEIGHT - 267.12 kg

UNLESS OTHERWISE SPECIFIED: TOLERANCES: MACHINE + / - 0.25mm FABRICATION + / - 1.0 mm

DIMENSIONS IN MILLIMETRES

THIS DRAWING IS THE PROPERTY OF MECHANICAL ENGINEERING & CAD SERVICES (MECS) Pty Ltd & MUST NOT BE MANUFACTURED FROM,COPIED OR TRANSMITTED TO A THIRD PARTY WITHOUT THE PRIOR APPROVAL FROM MECHANICAL ENGINEERING & CAD SERVICES (MECS) Pty Ltd

MECS
Mechanical Engineering & CAD Services
11 Campbell Place WAGGA NSW 2650
Ph: - 0409 985 816
Email: nick@mecservices.com.au

THIRD ANGLE PROJECTION

CLIENT
RODDY ENGINEERING
14 Waratah St TUMUT NSW 2720
Ph: - 02 6947 4039
Email: roddyeng.com.au

TITLE: FLOOR FRAMING

DWG NO. 3956-20-10 REV A2

DRAWN N DE BRUYN DATE 18/08/2025 SCALE:1:20 SHEET 1 OF 1