ITEM	DRAWING No	DESCRIPTION	QTY.	MASS (kg)
1	3956-20-10	FLOOR FRAMING	1	267

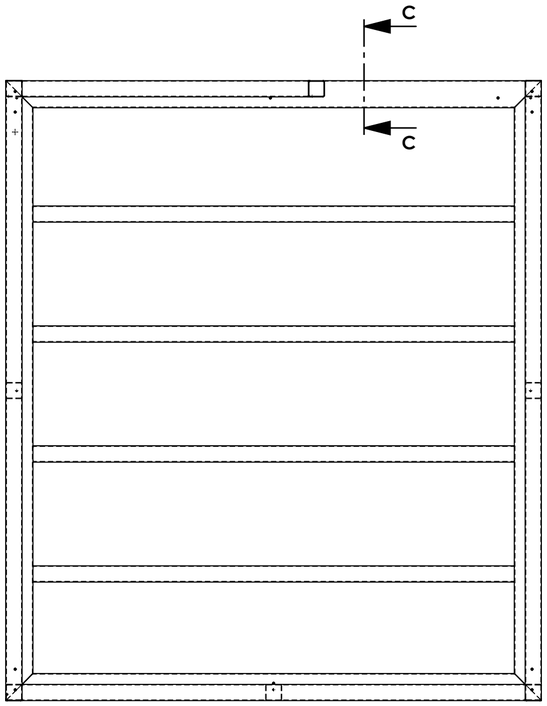

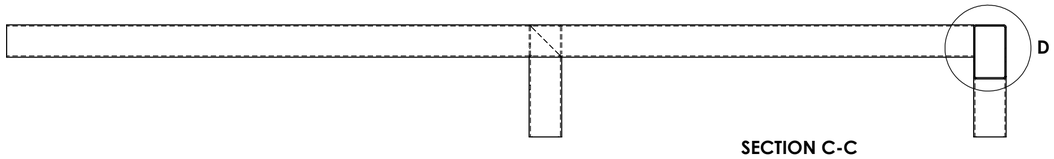

SECTION C-C
SCALE 1 : 10

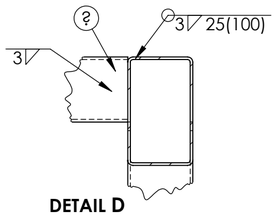

DETAIL D
SCALE 1 : 5

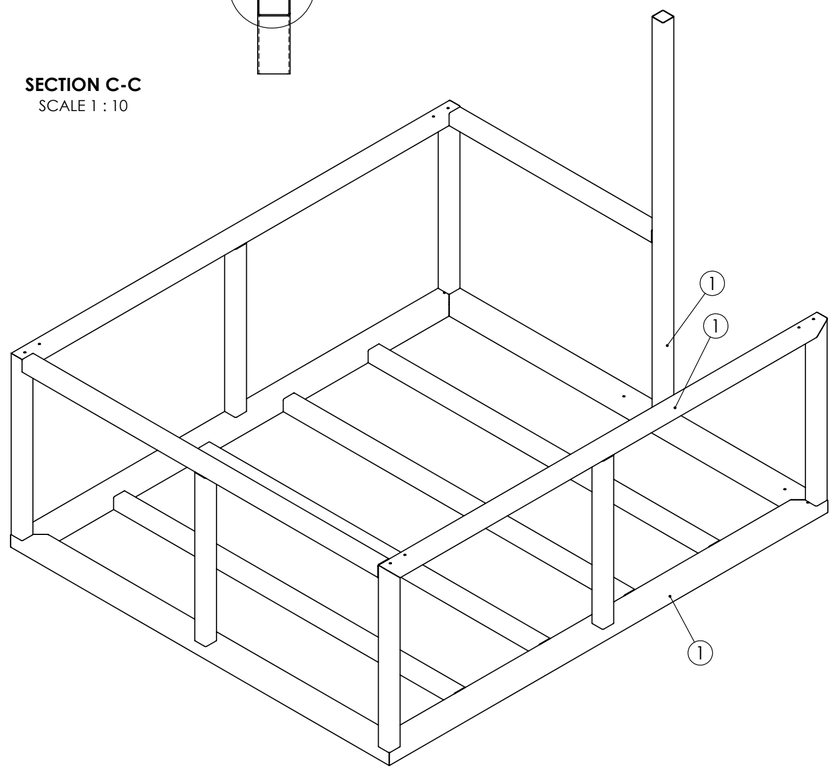

FOR INFORMATION ONLY
DO NOT MANUFACTURE

NOT FOR MANUFACTURE

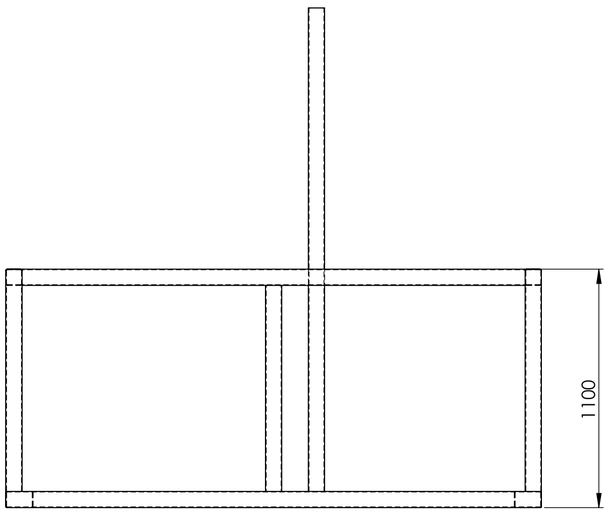

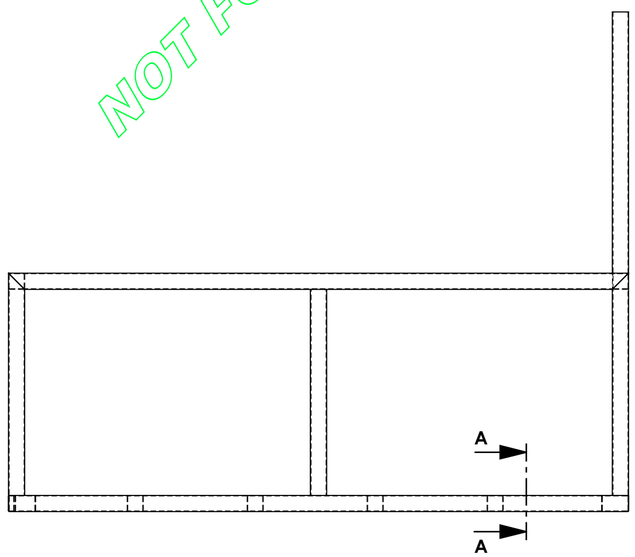

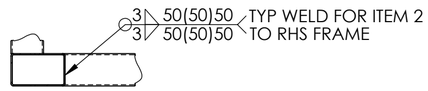

DETAIL B
SCALE 1 : 10

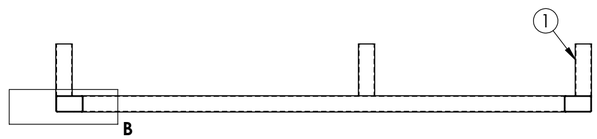

SECTION A-A

NOTES - UNO
ALL FILLET WELDS SHALL BE 3 MM CONTINUOUS
ALL BUTT WELDS SHALL BE FULL PENETRATION
ALL WELDS, CUTS AND HOLES SHALL BE TREATED
WITH 2 COATS OF ZINC RICH PRIMER

DIMENSIONS REQUIRE CONFIRMING BEFORE WORKSHOP DRAWINGS CAN DONE

FLOOR FRAMING ASSEMBLY WEIGHT - 267 kg

UNLESS OTHERWISE SPECIFIED: TOLERANCES: MACHINE + / - 0.25mm FABRICATION + / - 1.0 mm

DIMENSIONS IN MILLIMETRES

THIS DRAWING IS THE PROPERTY OF MECHANICAL ENGINEERING & CAD SERVICES (MECS) Pty Ltd & MUST NOT BE MANUFACTURED FROM,COPIED OR TRANSMITTED TO A THIRD PARTY WITHOUT THE PRIOR APPROVAL FROM MECHANICAL ENGINEERING & CAD SERVICES (MECS) Pty Ltd

MECS
Mechanical Engineering & CAD Services
11 Campbell Place WAGGA NSW 2650
Ph: - 0409 985 816
Email: nick@mecservices.com.au

THIRD ANGLE PROJECTION

WEIGHT: kg

CLIENT

RODDY ENGINEERING
14 Waratah St TUMUT NSW 2720
Ph: - 02 6947 4039
Email: roddyeng.com.au

TITLE: FLOOR FRAMING ASSEMBLY

DWG NO. 3956-20 REV A2

DRAWN N DE BRUYN DATE 15/04/2025 SCALE:1:20 SHEET 1 OF 1