ITEM NO.	DESCRIPTION	LENGTH	QTY	MASS (kg)
1	75 x 75 x 3 DURAGAL SHS	3370	2	21.96
2	75 x 75 x 3 DURAGAL SHS	299	2	1.93
3	75 x 75 x 3 DURAGAL SHS	442	1	2.88
4	75 x 75 x 3 DURAGAL SHS	142	1	0.93
5	75 x 75 x 3 DURAGAL SHS	292	1	1.67
6	75 x 75 x 3 DURAGAL SHS	3533	1	22.04
7	75 x 75 x 3 DURAGAL SHS	3533	1	22.04
8	75 x 75 x 3 DURAGAL SHS	600	1	3.64
9	75 x 75 x 3 DURAGAL SHS	2980	5	19.42
10	75 x 75 x 3 DURAGAL SHS	292	1	1.67
11	75 x 75 x 3 DURAGAL SHS	600	1	3.64
12	75 x 75 x 3 DURAGAL SHS	2980	1	19.42
13	75 x 75 x 3 DURAGAL SHS	1330	1	8.42
14	75 x 75 x 3 DURAGAL SHS	330	1	1.91
15	75 x 75 x 3 DURAGAL SHS	2980	1	19.42

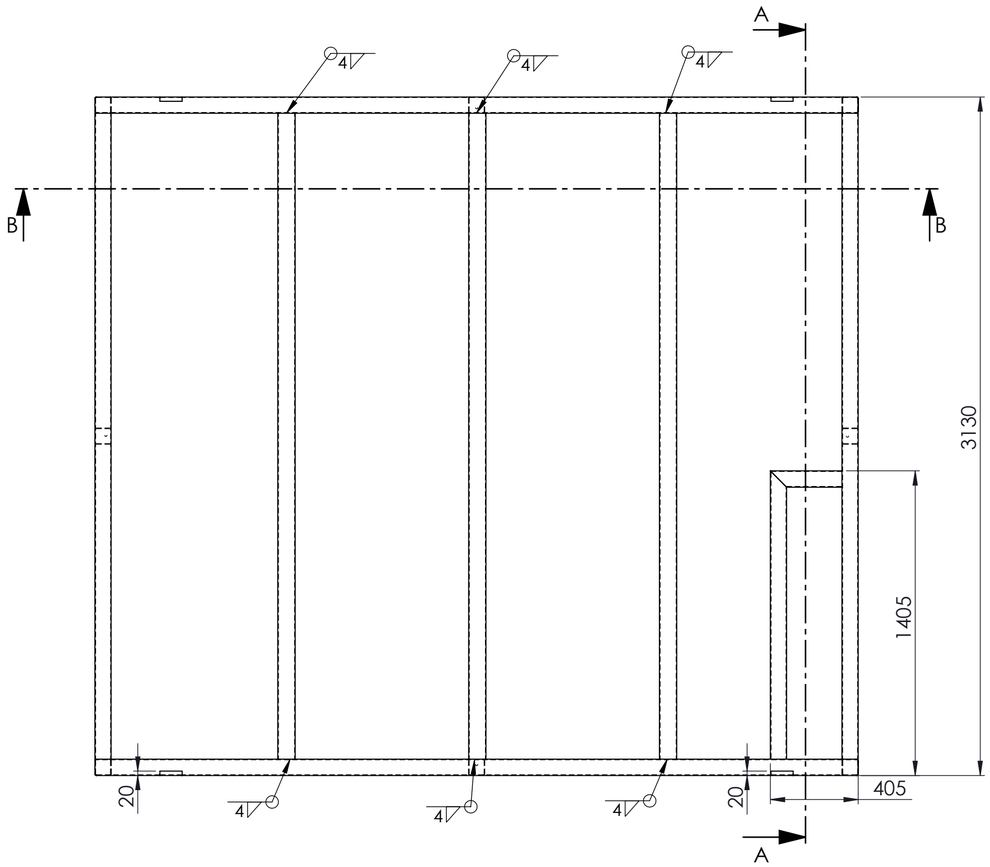

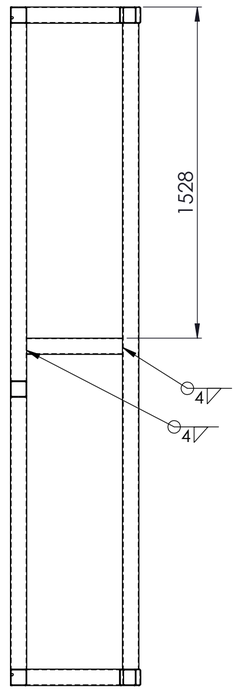

SECTION A-A

FOR INFORMATION ONLY
DO NOT MANUFACTURE

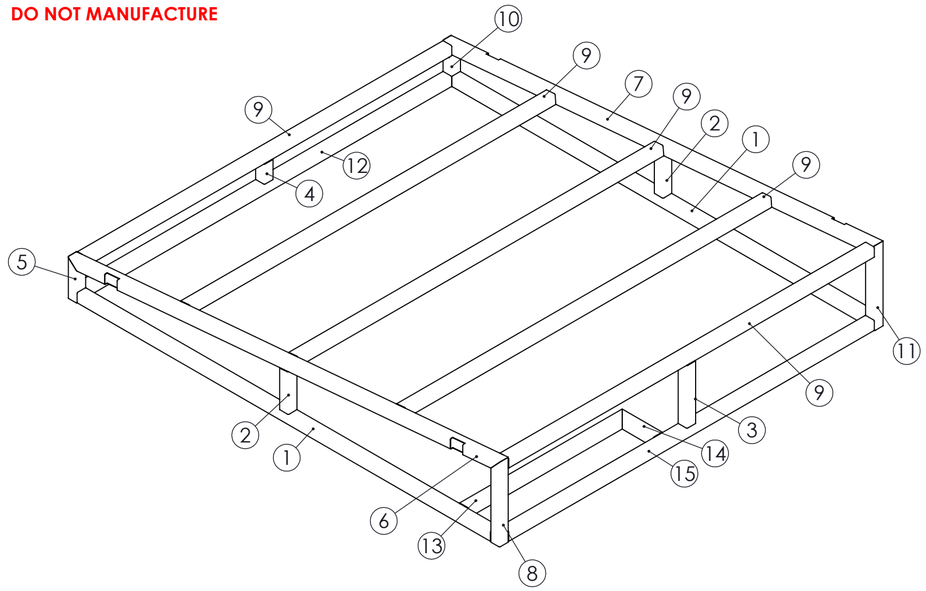

FOR INFORMATION ONLY
DO NOT MANUFACTURE

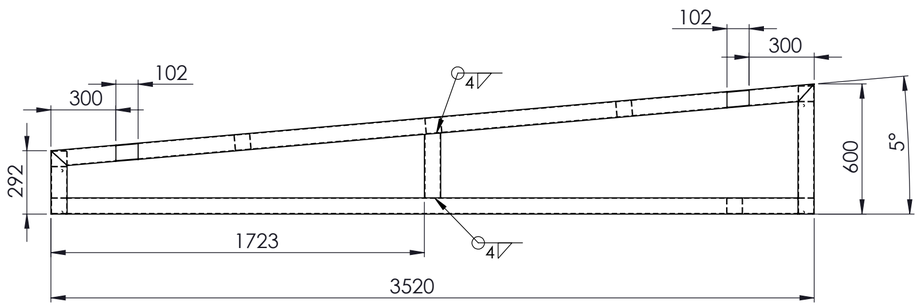

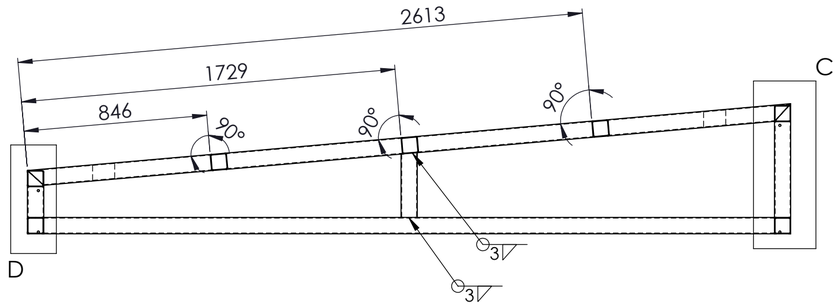

SECTION B-B

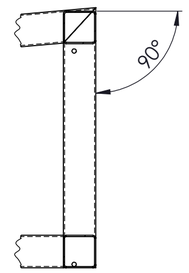

DETAIL C
SCALE 1 : 10

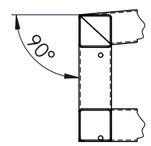

DETAIL D
SCALE 1 : 10

NOTES - UNO
ALL FILLET WELDS SHALL BE 3 MM CONTINUOUS UNO
ALL BUTT WELDS SHALL BE FULL PENETRATION
ALL WELDS, CUTS AND HOLES SHALL BE TREATED WITH 2 COATS OF ZINC RICH PRIMER

ROOF FRAME WEIGHT - 252.60 kg

UNLESS OTHERWISE SPECIFIED: TOLERANCES: MACHINE + / - 0.25mm FABRICATION + / - 1.0 mm

DIMENSIONS IN MILLIMETRES

THIS DRAWING IS THE PROPERTY OF MECHANICAL ENGINEERING & CAD SERVICES (MECS) Pty Ltd & MUST NOT BE MANUFACTURED FROM,COPIED OR TRANSMITTED TO A THIRD PARTY WITHOUT THE PRIOR APPROVAL FROM MECHANICAL ENGINEERING & CAD SERVICES (MECS) Pty Ltd

MECS
Mechanical Engineering & CAD Services
11 Campbell Place WAGGA NSW 2650
Ph: - 0409 985 816
Email: nick@mecservices.com.au

THIRD ANGLE PROJECTION

CLIENT
RODDY ENGINEERING
14 Waratah St TUMUT NSW 2720
Ph: - 02 6947 4039
Email: roddyeng.com.au

TITLE: ROOF FRAME

DWG NO. 3956-25-10 REV A2

DRAWN N DE BRUYN DATE 18/07/2025 SCALE:1:20 SHEET 1 OF 1