Cast Steel Bolted Bonnet Gate Valves

Class 300

Bolted Bonnet, Outside Screw And Yoke,Rising Stem,Non-rising Handwheel, Flexible Wedge.

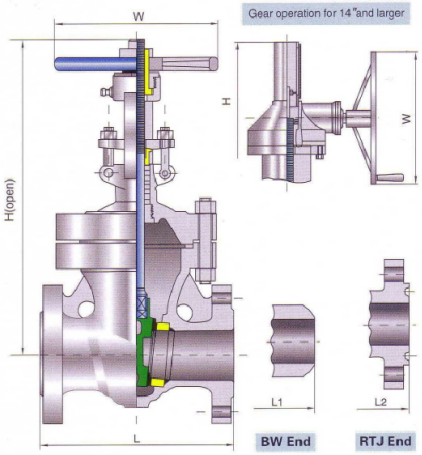

Parts List

PART	MATERIALS		
Body	ASTM A216 WCB	ASTM A351 CF8	ASTM A351 CF8M
Seat ring	A105+STL	ASTM A351 CF8	ASTM A351 CF8M
Wedge	WCB+13Cr	ASTM A351 CF8	ASTM A351 CF8M
Stem	ASTM A182 F6a	ASTM A182 F304	ASTM A182 F316
Back seat	ASTM A182 F6a	ASTM A182 F304	ASTM A182 F316
Packing	Graphite	Graphite	Graphite
Gland	ASTM A182 F6a	ASTM A182 F304	ASTM A182 F316
Gland eyebolt	ASTM A193 B7	ASTM A193 B8	ASTM A193 B8M
Eyebolt nut	ASTM A194 2H	ASTM A194 8	ASTM A194 8M
Eyebolt pin	ASTM A36	304 S.S.	316 S.S.
Gland flange	ASTM A216 WCB	ASTM A351 CF8	ASTM A351 CF8M
Bonnet bolt	ASTM A193 B7	ASTM A193 B8	ASTM A193 B8M
Bonnet nut	ASTM A194 2H	ASTM A194 8	ASTM A194 8M
Gasket	SS304+Graphite	SS304+Graphite	SS316+Graphite
Bonnet	ASTM A216 WCB	ASTM A351 CF8	ASTM A351 CF8M
Nipple	Carbon steel	Carbon steel	Carbon steel
Stem nut	ASTM A439 D2	ASTM A439 D2	ASTM A439 D2
Yoke	ASTM A216 WCB	ASTM A216 WCB	ASTM A216 WCB
Handwheel	Ductile Iron	Ductile Iron	Ductile Iron
Handwheel nut	Carbon steel	Carbon steel	Carbon steel

Features

- Face to face and end to end dimension:
  36"and smaller to ASME B16.10
- Flange dimension:
  24"and smaller to ASME B16.5
  28"and larger to ASME B16.47 series A
- Shell wall thickness:
  28"and smaller to API600
  28"and larger to manufacturer's standard
- B.W.end to ASME B16.25
- 8"and smaller valves have a one–piece bonnet and yoke design
  10"and larger valves have a two–piece bonnet and yoke design.

Dimensions And Weights

Valve Size		1 1/2	2	2 1/2	3	4	5	6	8	10	12	14	16	18	20	24	28	30	32	36
	mm	40	50	65	80	100	125	150	200	250	300	350	400	450	500	600	700	750	800	900
L–L1 (RF–BW)	in.	7.5	8.5	9.5	11.12	12	15	15.88	16.5	18	19.75	30	33	36	39	45	54	55	61.12	68
	mm	190	216	241	283	305	381	403	419	457	502	762	838	914	991	1143	1372	1397	1553	1727
L2 (RTJ)	in.	8.0	9.12	10.12	11.74	12.62	15.62	16.5	17.12	18.62	20.37	30.62	33.62	36.62	39.75	45.88	54	56	61.12	69.12
	mm	203	232	257	298	321	397	419	435	473	518	778	854	930	1010	1165	1372	1422	1553	1756
H (open)	in.	14.7	15.75	18.75	21.38	25.63	30.31	34.63	40.81	50.19	56.63	65	72.44	79.94	88.19	114.19	122	139.8	152	169.75
	mm	374	400	477	543	650	770	880	1037	1275	1438	1650	1840	2030	2240	2900	3100	3540	3860	4312
W	in.	7.88	7.88	9.88	9.88	11.81	11.81	13.75	17.69	19.69	22.06	18.13	18.13	24	24	24	24	30	30	30
	mm	200	200	250	250	300	300	350	450	500	560	460	460	610	610	610	610	760	760	760
WT (kg)	RF	26	30	39	55	83	92	137	240	333	536	699	1010	1205	1720	2800	3150	3786	4210	6850
	BW	22	26	34	47	68	77	118	195	271	432	595	848	1025	1460	2294	2870	3220	3675	4990

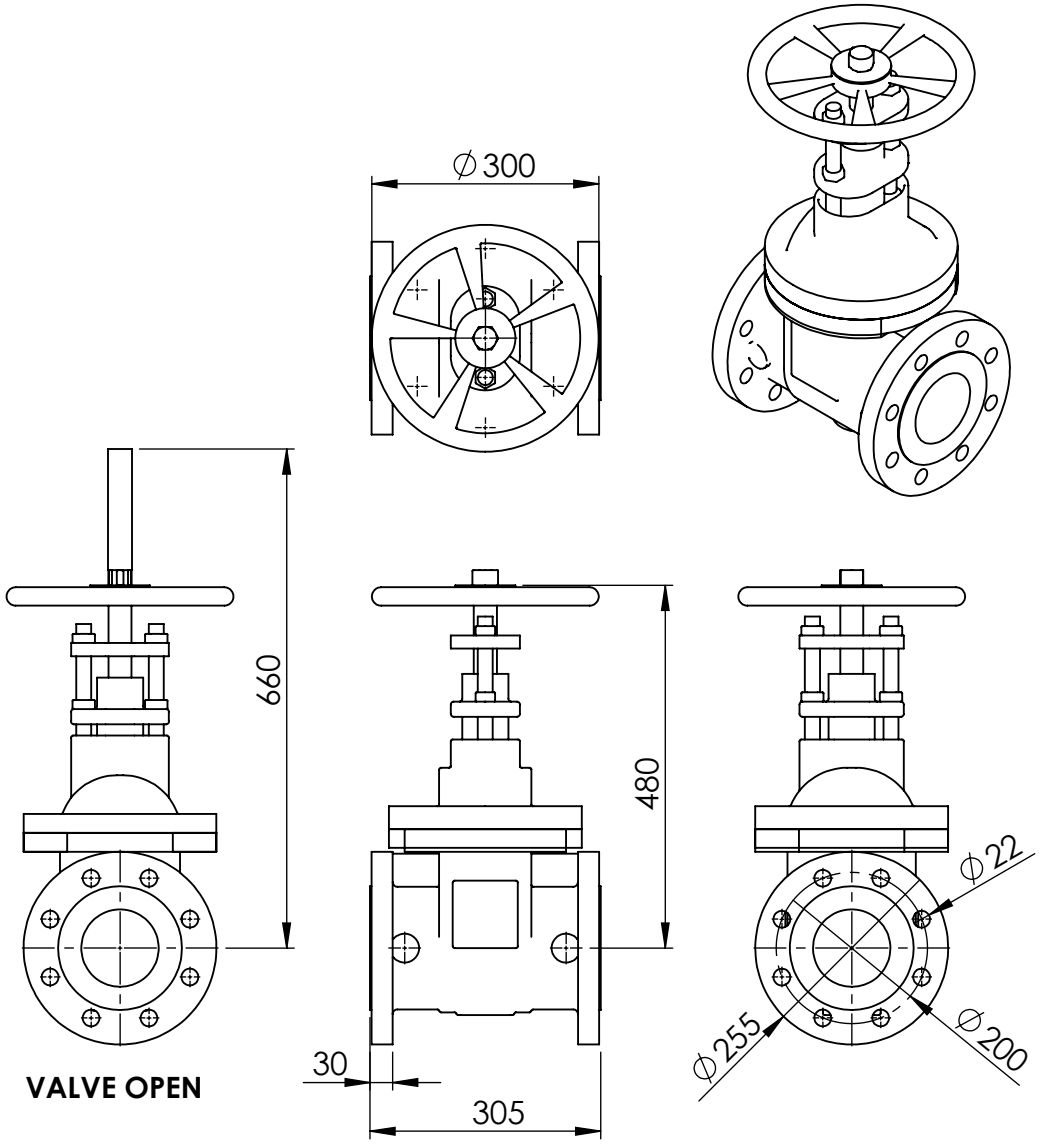

UNLESS OTHERWISE SPECIFIED: TOLERANCES: MACHINE + / - 0.25mm FABRICATION + / - 1.0 mm

DIMENSIONS IN MILLIMETRES

THIS DRAWING IS THE PROPERTY OF MECHANICAL ENGINEERING & CAD SERVICES (MECS) Pty Ltd & MUST NOT BE MANUFACTURED FROM,COPIED OR TRANSMITTED TO A THIRD PARTY WITHOUT THE PRIOR APPROVAL FROM MECHANICAL ENGINEERING & CAD SERVICES (MECS) Pty Ltd

MECS
Mechanical Engineering & CAD Services
11 Campbell Place WAGGA NSW 2650
Ph: - 0409 985 816
Email: nick@mecservices.com.au

THIRD ANGLE PROJECTION

WEIGHT: 11.01 kg

CLIENT

RODDY ENGINEERING
14 Waratah St TUMUT NSW 2720
Ph: - 02 6947 4039
Email: roddyeng.com.au

TITLE: 100NB ARITA GATE VALVE 300 Lb ANSI

DWG NO.	OEM-100-ARITA	REV	A4
DRAWN N DE BRUYN	DATE 8/07/2025	SCALE:1:10	SHEET 1 OF 1