DIMENSIONS IN MILLIMETRES

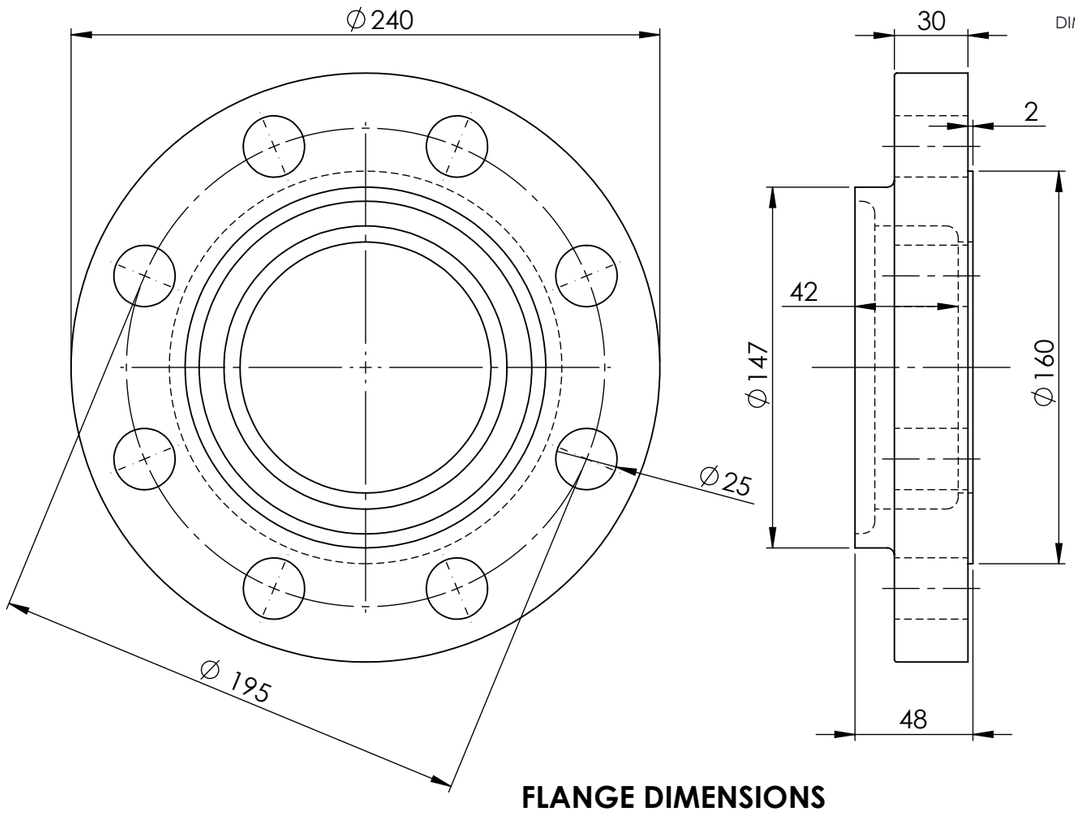

FLANGE DIMENSIONS

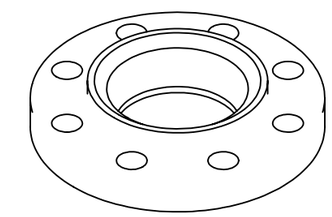

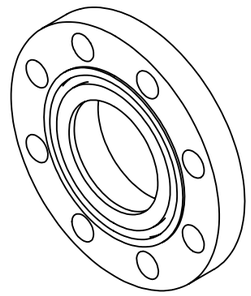

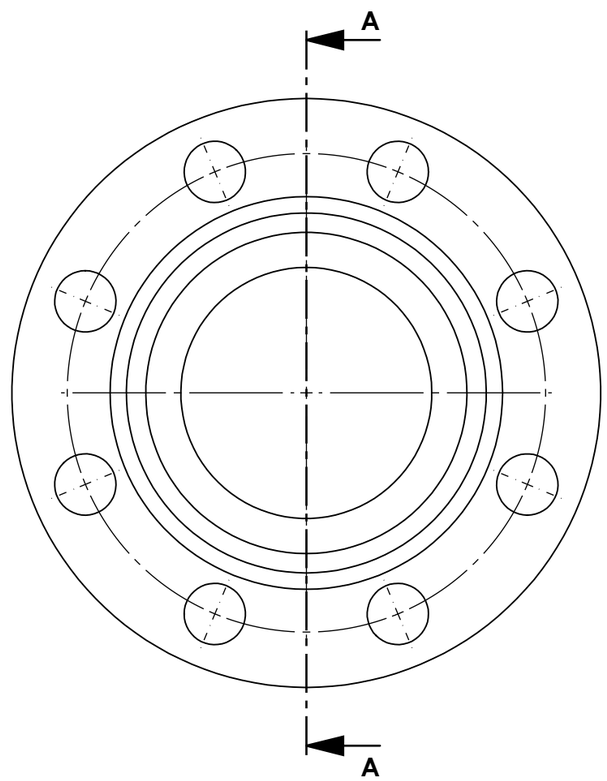

FLANGE MACHINED

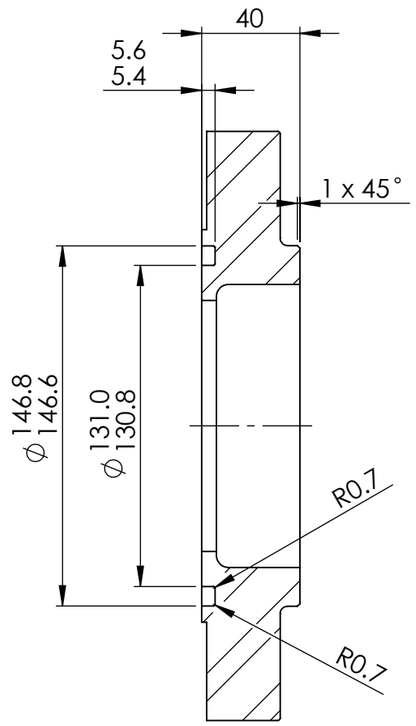

SECTION A-A

MATERIAL:- 316L STAINLESS STEEL

UNLESS OTHERWISE SPECIFIED: TOLERANCES: MACHINE + / - 0.25mm FABRICATION + / - 1.0 mm

DIMENSIONS IN MILLIMETRES

THIS DRAWING IS THE PROPERTY OF MECHANICAL ENGINEERING & CAD SERVICES (MECS) Pty Ltd & MUST NOT BE MANUFACTURED FROM,COPIED OR TRANSMITTED TO A THIRD PARTY WITHOUT THE PRIOR APPROVAL FROM MECHANICAL ENGINEERING & CAD SERVICES (MECS) Pty Ltd

MECS
Mechanical Engineering & CAD Services
11 Campbell Place WAGGA NSW 2650
Ph: - 0409 985 816
Email: nick@mecservices.com.au

THIRD ANGLE PROJECTION

CLIENT

RODDY ENGINEERING
14 Waratah St TUMUT NSW 2720
Ph: - 02 6947 4039
Email: roddyeng.com.au

TITLE:
100NB FLANGE JIS 30 K TYPE C 316L S/S MACHINED ORING GROOVE

DWG NO. OEM-100NB-JIS30K-C-O-316L | REV | A3

DRAWN N DE BRUYN | DATE 18/03/2024 | SCALE:1:2.5 | SHEET 1 OF 1