DIMENSIONS IN MILLIMETRES

NERO HALF COUPLING BSPT & NPT 3000LB 316/L

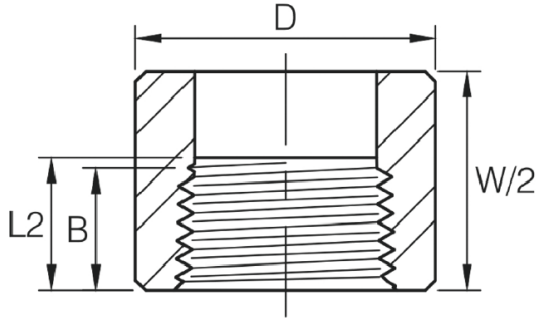

SIZE	PRODUCT CODE	PRODUCT CODE	LENGTH OF THREAD (MIN)		W	D	KG EACH
			B	L2			
1/8	3HS02T	3HS02N	6.4	6.7	32	16	0.02
1/4	3HS04T	3HS04N	8.1	10.2	35	19	0.03
3/8	3HS06T	3HS06N	9.1	10.4	38	22	0.03
1/2	3HS08T	3HS08N	10.9	13.6	48	28	0.06
3/4	3HS12T	3HS12N	12.7	13.9	51	35	0.11
1	3HS16T	3HS16N	14.7	17.3	60	44	0.23
1-1/4	3HS20T	3HS20N	17.0	18	67	57	0.37
1-1/2	3HS24T	3HS24N	17.8	18.4	79	64	0.54
2	3HS32T	3HS32N	19.0	19.2	86	76	0.70
2-1/2	3HS40T	3HS40N	23.6	28.9	92	92	1.13
3	3HS48T	3HS48N	25.9	30.5	108	108	1.68

** DIMENSIONS SUBJECT TO CHANGE - PLEASE CONTACT US IF CRITICAL **

NERO's range of Half Couplings are available in BSPT, BSPP, NPT and Socket Weld configurations - ASME B16.11-2016

Pressure rating up to 200 BAR (3000 PSI)

Full Material traceability is available and 3.1B certification can be provided upon request

BSPT threads are to ISO 7.1
NPT threads are to ANSI B2.1

We also keep Half Couplings in Socket Weld 3000lb 316/L

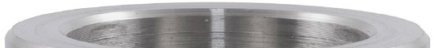

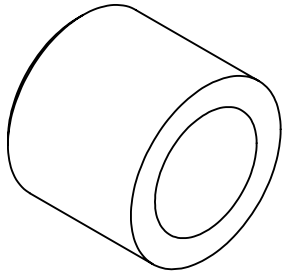

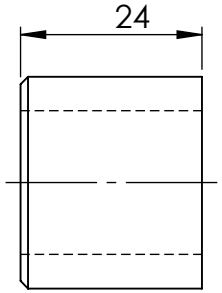

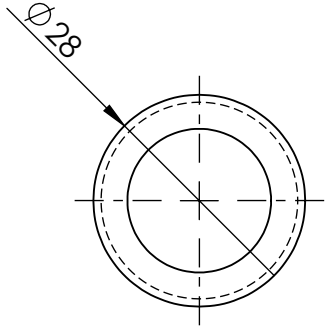

MATERIAL:- 316 STAINLESS STEEL

UNLESS OTHERWISE SPECIFIED: TOLERANCES: MACHINE + / - 0.25mm FABRICATION + / - 1.0 mm

THIS DRAWING IS THE PROPERTY OF MECHANICAL ENGINEERING & CAD SERVICES (MECS) Pty Ltd & MUST NOT BE MANUFACTURED FROM,COPIED OR TRANSMITTED TO A THIRD PARTY WITHOUT THE PRIOR APPROVAL FROM MECHANICAL ENGINEERING & CAD SERVICES (MECS) Pty Ltd

THIRD ANGLE PROJECTION

WEIGHT: 0 Kg

MECS
Mechanical Engineering & CAD Services
11 Campbell Place WAGGA NSW 2650
Ph: - 0409 985 816
Email: nick@mecservices.com.au

TITLE: 1/2 BSPP 3000 Lb HALF COUPLING 316L S/S

DWG NO. OEM-1_2-BSPP-3000-316L REV

A4

DRAWN N DE BRUYN DATE 19/03/2024 SCALE:1:1 SHEET 1 OF 1