VALVE PICTORIAL ONLY

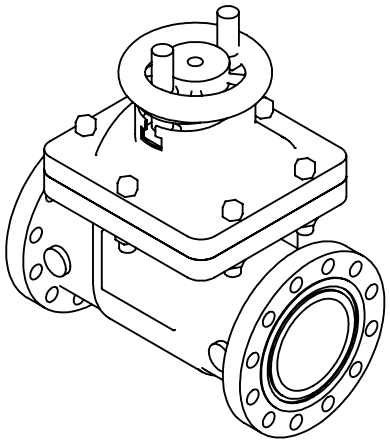

COMPONENTS AND MATERIAL LISTS

NO.	PART NAME	MATERIAL – ASTM	Q'TY
1	BODY	ASTM A351 CF8M+STL	
2	WEDGE	ASTM A351 CF8M	
3	STEM	ASTM A182 F316	
4	NUT	ASTM A194 8M	
5	BOLT	ASTM A193 B8M	
6	GASKET	SS316+FLEXIBLE GRAPHITE	
7	BONNET	ASTM A351 CF8M	
8	PACKING	FLEXIBLE GRAPHITE	
9	PIN	ASTM A276 304	
10	GLAND EYEBOLT	ASTM A193 B8M	
11	GLAND NUT	ASTM A194 8M	
12	GLAND	ASTM A351 CF8	
13	YOKE	ASTM A351 CF8M	
14	STEM NUT	COPPER ALLOY	
15	GEAR BOX	ASSEMBLY	

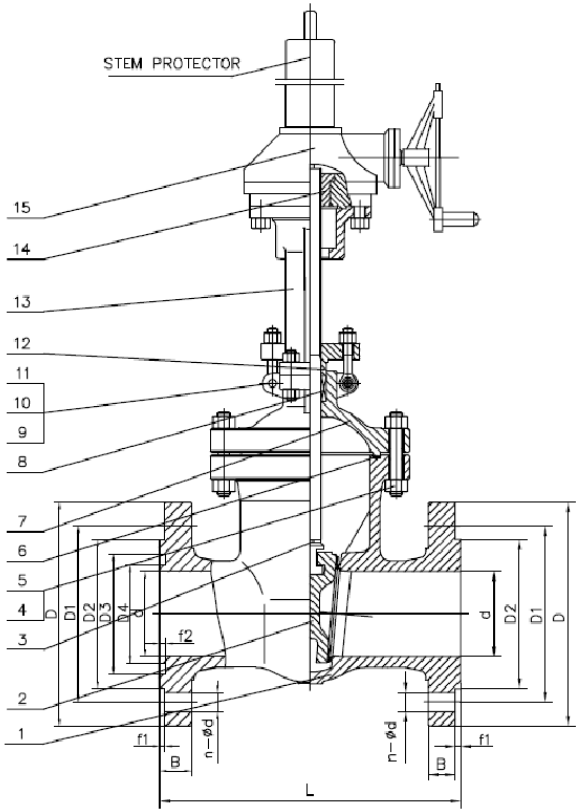

RELEVANT STANDRAD

DESIGN & MFT	API 600
PRE–TEMP. RATING	ASME B16.34
F–F DIMENSION	ASME B16.10
INSPECT & TEST	API 598
ENDS CONNECTION	FLANGED R.F
FLANGE DIMENSION	JIS 40KXJIS 40K
MARKING	MSS–SP–25
PAINTING	MANUFACTURE STD

TESTING UNIT: MPa

PRESS. RATING	JIS 40K
WATER SHELL	15.4
WATER SEAT	11.3
AIR TEST	0.6
TEMPERATURE	–100~500°C

DIMENSIONS [UNIT: MM]

DN	d	L	D	D1	D2	D3	D4	n–ød	B	f1	f2
DN200	200	660	405	345	290	254	235.2	12–Ø33	50	5	6

FIG. NO. GV–40K*40K–CF8M–RF–GEAR

DRAWED BY: Mr.WILLIAM
CHECKED BY: Mr.ALEXANDER
APPROVED BY: Mr.THOMAS
DATE: JUL.19TH, 2018

SALES DRAWING
API 600 OS&Y R.S B.B GATE VALVE
BODY: A351 CF8M TRIM: SS316
JIS 40K RF WITH GROOVE X JIS 40K RF

JOHN VALVES PTY LTD / DWG NO.E341F-GL200

MATERIAL:- 316 STAINLESS STEEL

UNLESS OTHERWISE SPECIFIED: TOLERANCES: MACHINE + / - 0.25mm FABRICATION + / - 1.0 mm

DIMENSIONS IN MILLIMETRES

THIS DRAWING IS THE PROPERTY OF MECHANICAL ENGINEERING & CAD SERVICES (MECS) Pty Ltd & MUST NOT BE MANUFACTURED FROM,COPIED OR TRANSMITTED TO A THIRD PARTY WITHOUT THE PRIOR APPROVAL FROM MECHANICAL ENGINEERING & CAD SERVICES (MECS) Pty Ltd

MECS
Mechanical Engineering & CAD Services
11 Campbell Place WAGGA NSW 2650
Ph: - 0409 985 816
Email: nick@mecservices.com.au

THIRD ANGLE PROJECTION

WEIGHT: 0.0 kg

CLIENT

RODDY ENGINEERING
14 Waratah St TUMUT NSW 2720
Ph: - 02 6947 4039
Email: roddyeng.com.au

TITLE:

VALVE 2450 - 200NB GATE VALVE

DWG NO. OEM-2450-SHL			A4
DRAWN N DE BRUYN	DATE 17/01/2025	SCALE:1:10	SHEET 1 OF 1