—— COMPONENTS AND MATERIAL LISTS ——

NO.	PART NAME	MATERIAL – ASTM	Q'TY
1	BODY	ASTM A351 CF8M+STL	
2	WEDGE	ASTM A351 CF8M	
3	STEM	ASTM A182 F316	
4	NUT	ASTM A194 8M	
5	BOLT	ASTM A193 B8M	
6	GASKET	SS316+FLEXIBLE GRAPHITE	
7	BONNET	ASTM A351 CF8M	
8	PACKING	FLEXIBLE GRAPHITE	
9	PIN	ASTM A276 304	
10	GLAND EYEBOLT	ASTM A193 B8M	
11	GLAND NUT	ASTM A194 8M	
12	GLAND FLANGE	ASTM A351 CF8	
13	YOKE	ASTM A351 CF8M	
14	BEARING	ALLOY STEEL	
15	NIPPLE	COPPER ALLOY	
16	STEM NUT	COPPER ALLOY	
17	RETAINING NUT	A29 GR.1045	
18	HAND WHEEL	DUCTILE IRON	
19	LOCK NUT	A29 GR.1045	

Valve 2452
Murray 2
Unit 11

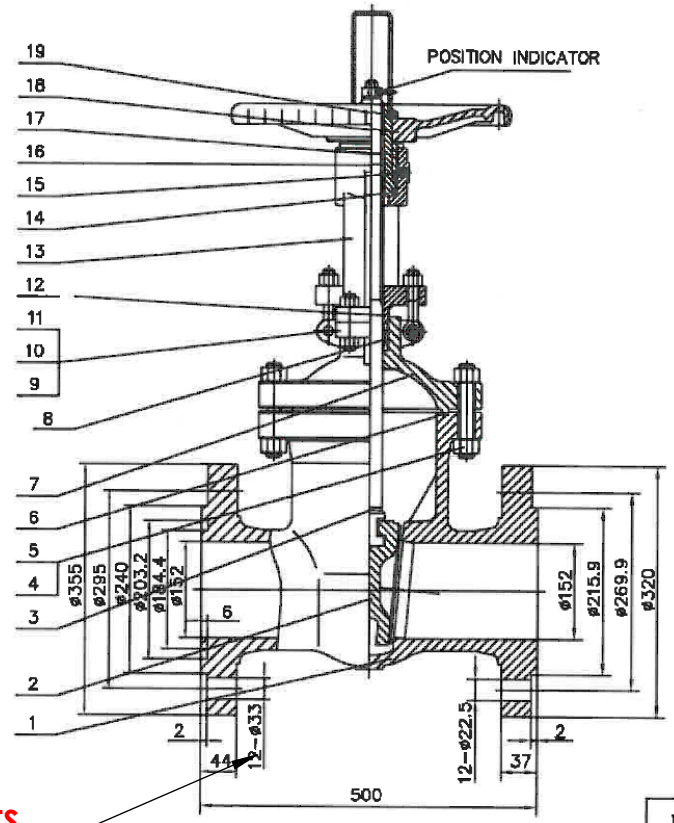

DRILL OUT TO 35 DIA
FOR MYLAR TUBE INSERTS
9/1/25

NOTE: JIS 40K RF WITH O-GROOVE X ANSI CL300 RF WITHOUT O-GROOVE

RELEVANT STANDRAD

DESIGN & MFT	API 600
PRE-TEMP. RATING	ASME B16.34
F-F DIMENSION	ASME B16.10
INSPECT & TEST	API 598
ENDS CONNECTION	FLANGED R.F
FLANGE DIMENSION	JIS B2220-40K*B16.5
MARKING	MSS-SP-25
PAINTING	MANUFACTURE STD

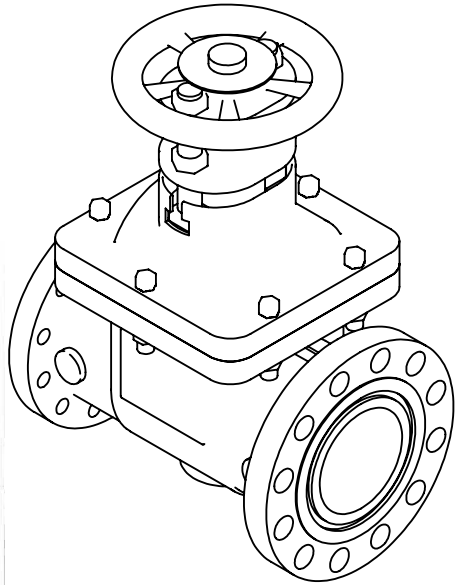

TESTING	UNIT: MPa
PRESS. RATING	JIS 40K
WATER SHELL	15.4
WATER SEAT	11.3
AIR TEST	0.6
TEMPERATURE	-100~350°C

FIG. NO. GV-JIS 40K*CL300-CF8M-RF-HW

DRAWED BY: Mr.WILLIAM
CHECKED BY: Mr.ALEXANDER
APPROVED BY: Mr.THOMAS
DATE: JUL.19TH, 2015

SALES DRAWING
DN150 OSBY R.S B.B GATE VALVE
BODY: A351 CF8M TRIM SS316

JOHN VALVES PTY LTD / DWG NO.Z341F-JIS 40K

MATERIAL:- 304 STAINLESS STEEL

UNLESS OTHERWISE SPECIFIED: TOLERANCES: MACHINE + / - 0.25mm FABRICATION + / - 1.0 mm

DIMENSIONS IN MILLIMETRES

THIS DRAWING IS THE PROPERTY OF MECHANICAL ENGINEERING & CAD SERVICES (MECS) Pty Ltd & MUST NOT BE MANUFACTURED FROM,COPIED OR TRANSMITTED TO A THIRD PARTY WITHOUT THE PRIOR APPROVAL FROM MECHANICAL ENGINEERING & CAD SERVICES (MECS) Pty Ltd

MECS
Mechanical Engineering & CAD Services
11 Campbell Place WAGGA NSW 2650
Ph: - 0409 985 816
Email: nick@mecservices.com.au

THIRD ANGLE PROJECTION

WEIGHT: 231.9 kg

CLIENT

RODDY ENGINEERING
14 Waratah St TUMUT NSW 2720
Ph: - 02 6947 4039
Email: roddyeng.com.au

TITLE: VALVE 2452

DWG NO. OEM-2452-SHL

A4

DRAWN N DE BRUYN DATE SCALE:1:10 SHEET 1 OF 1