DIMENSIONS IN MILLIMETRES

250mm Polyurethane Tyred Cast Iron Centred Wheel | 1/2" Axle Diameter (PU1056-50)

International Shipping Available

The PU1056-50 manufactured by Richmond Rolling Solutions is a 250mm diameter polyurethane tyred cast iron centred wheel with a top load capacity of 1200kg and has a tyre width of 50mm.The following Richmond castors use this wheel (not necessarily with the same axle diameter) R1020, S1019, S1019-4DL, S1019B, R1039, R1052, S1038, S1051.This wheel is designed to suit 1/2 inch (12.7mm) axles and this wheel is available for the following alternative axle size: 20mm, 25mm.

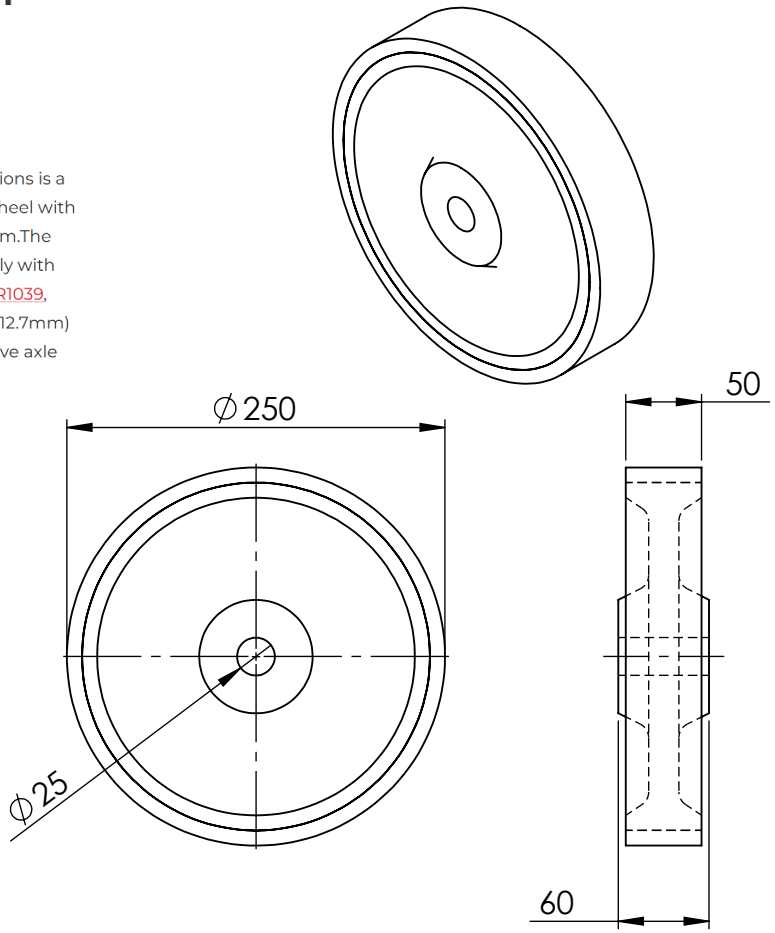

Wheel Diameter (mm)	250
Tyre Width (mm)	50
Boss Width (mm)	60
Axle Diameter	1/2 inch (12.7mm)
Wheel Bearing Type	Ball Bearing
Maximum Load Capacity (kg)	1200

MATERIAL:- Material <not specified>

UNLESS OTHERWISE SPECIFIED: TOLERANCES: MACHINE + / - 0.25mm FABRICATION + / - 1.0 mm

THIS DRAWING IS THE PROPERTY OF MECHANICAL ENGINEERING & CAD SERVICES (MECS) Pty Ltd & MUST NOT BE MANUFACTURED FROM,COPIED OR TRANSMITTED TO A THIRD PARTY WITHOUT THE PRIOR APPROVAL FROM MECHANICAL ENGINEERING & CAD SERVICES (MECS) Pty Ltd

THIRD ANGLE PROJECTION

WEIGHT: 11 Kg

MECS
Mechanical Engineering & CAD Services
11 Campbell Place WAGGA NSW 2650
Ph: - 0409 985 816
Email: nick@mecservices.com.au

TITLE: 250mm POLYURETHANE TYRED CAST IRON CENTRED WHEEL

DWG NO. OEM-250-PU1056-50 REV A4

DRAWN N DE BRUYN DATE 6/01/2026 SCALE:1:5 SHEET 1 OF 1