THIRD ANGLE PROJECTION

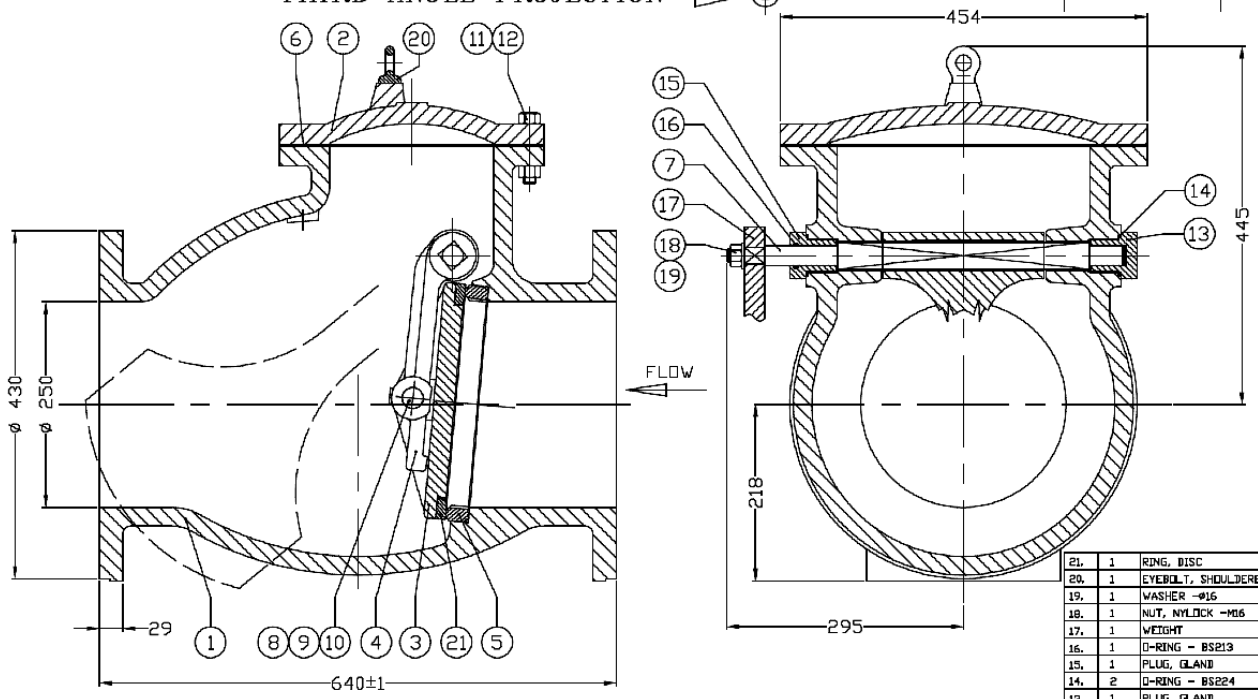

CLIENT	ORDER No	QTY	REMARKS

AP210

DESIGN PRESSURE RATING: PN21

CONFORMANCE: STANDARD AS4794

TESTING: BODY - 3150kPa
SEAT - 2100kPa

COATING: 2 PAC EPOXY
JOTUN JOTACOTE 412
MIN. DFT - 350µm
AS4020 - POTABLE WATER
APPROVED

FLANGE DRILLING AVAILABLE:
UNDRILLED
AS2129 - TABLE 'C'
- TABLE 'D'
- TABLE 'E'
- TABLE 'F'
AS4087 - RAISED FACE

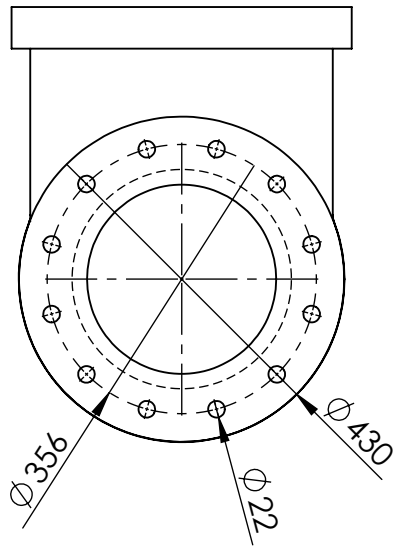

ITEM	QTY	DESCRIPTION	MATERIAL	SPECIFICATION	DETAIL	ITEM No.
21.	1	RING, DISC	GM	AS1565-C83600		
20.	1	EYEBOLT, SHOULDERED - M12	ZINC PL	AS2317		
19.	1	WASHER -ø16	SS	AS2837-304		
18.	1	NUT, NYLOCK -M16	SS	AS2837-304		
17.	1	WEIGHT	CS			L/AP210
16.	1	O-RING - BS213	NITRILE			
15.	1	PLUG, GLAND	AIB	AS1567-C35200		J/AP210
14.	2	O-RING - BS224	NITRILE			
13.	1	PLUG, GLAND	AIB	AS1567-C35200		I/AP210
12.	12	NUT -M16	SS	AS2837-304		
11.	12	BOLT -M16 X 75 LG.	SS	AS2837-316		
10.	2	PIN, SPLIT -ø5 X 51 LG.	SS	AS2837-304		
9.	2	WASHER -ø1"	SS	AS2837-304		
8.	1	PIN, DISC	SS	AS2837-304		H/AP209
7.	1	PIN, HINGE	SS	AS2837-431		K/AP209
6.	1	GASKET	NON-ASBESTOS			F/AP209
5	1	RING, BODY SEAT	GM	AS1565-C83600		E/AP209
4.	1	HINGE	SGCI	AS1831-500-7		D/AP209
3.	1	DISC	SGCI	AS1831-500-7		C/AP209
2.	1	BONNET	SGCI	AS1831-500-7		B/AP209
1.	1	BODY	SGCI	AS1831-500-7		A/AP209

250mm FIGURE 404 SWING CHECK VALVE
WITH LEVER & WEIGHT

© COPYRIGHT 2011
this drawing is the subject of copyright and is not to be used or reproduced without prior consent of JOHN VALVES Pty. Ltd.

WARNING : Engineering drawings are works covered by the commonwealth copyright act 1968.
As the copyright holder of these drawings, John Valves Pty. Ltd. is entitled to take legal action against any person who infringes that copyright unless a license has been granted to that person by John Valves Pty. Ltd. to undertake such copyright or unless the drawings are used solely for the purposes of research or study, without such a licence, reproducing the drawings (or a substantial part of them) or producing a version of the drawing in the form of products which the drawings depict will infringe John Valves Pty. Ltd. copyright.

J.V. ITEM No :

DRAWN : PRO 27/12/11 | CHECKED : | ENG APPROVED : | MASS : | SCALE : NTS

JOHN VALVES
The Valve People
General Engineering & Foundry
John Valves Pty Ltd ACN 100 277 852
Ballarat 3350
Victoria
Australia

DRG NO. AP210 | SHEET SIZE A2

UNLESS OTHERWISE SPECIFIED: TOLERANCES: MACHINE + / - 0.25mm FABRICATION + / - 1.0 mm

DIMENSIONS IN MILLIMETRES

THIS DRAWING IS THE PROPERTY OF MECHANICAL ENGINEERING & CAD SERVICES (MECS) Pty Ltd & MUST NOT BE MANUFACTURED FROM,COPIED OR TRANSMITTED TO A THIRD PARTY WITHOUT THE PRIOR APPROVAL FROM MECHANICAL ENGINEERING & CAD SERVICES (MECS) Pty Ltd

MECS
Mechanical Engineering & CAD Services
11 Campbell Place WAGGA NSW 2650
Ph: - 0409 985 816
Email: nick@mecservices.com.au

THIRD ANGLE PROJECTION

WEIGHT: 0 kg

CLIENT
RODDY ENGINEERING
14 Waratah St TUMUT NSW 2720
Ph: - 02 6947 4039
Email: roddyeng.com.au

TITLE: 250NB SWING CHECK VALVE TABLE F FLANGE DRILLED TABLE E

DWG NO. OEM-2608-SHL | A4

DRAWN N DE BRUYN | DATE 2/12/2025 | SCALE:1:10 | SHEET 1 OF 1