JOHNVALVES
The Valve People
Australian made since 1896

VALVE MANUFACTURE
GENERAL ENGINEERING
VALVE RECONDITIONING

A.C.N. 007 400 759 • A.B.N. 98 007 400 759

JOHN FIG. 601F Iron Gate Valves

PRESSURES: Water: 2100 kPa @ 80°C

HYDROSTATIC TEST PRESSURE:
Body: 3150 kPa Seat: 2100 kPa

- Capable of temperatures up to 90°C
- Available in larger sizes upon request

John 601F SG Cast Iron Gate Valves

The John Fig. 601F (Outside Screw - Rising Stem) gate valves are most often used for water application. Although, they are also suitable for general use on many other liquid services. They have a Cast Iron wedge with matching tapered bronze seats on the wedge and valve body. Flanges are manufactured to AS2129 Table 'F' standards, but may be drilled to customers specifications.

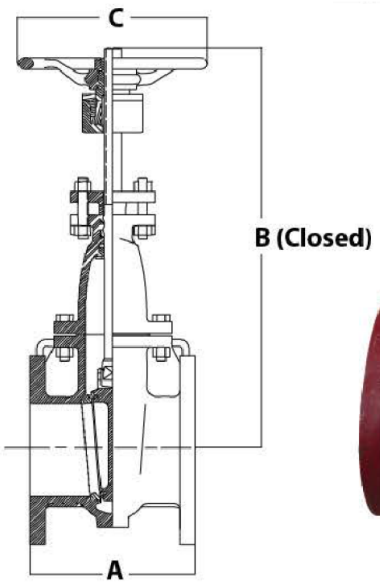

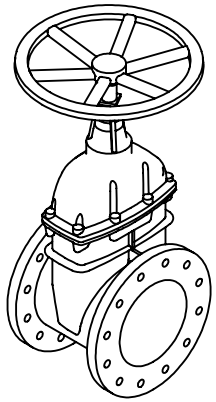

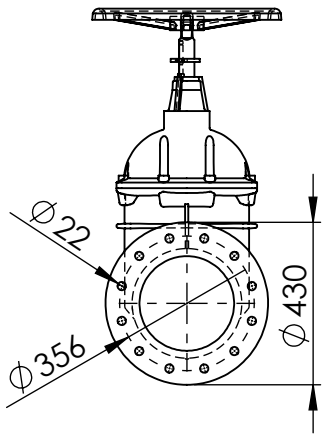

MATERIALS OF CONSTRUCTION

ITEM	DESCRIPTION	MATERIAL
1.	BODY	SG CAST IRON
2.	BONNET	SG CAST IRON
3.	WEDGE	SG CAST IRON
4.	SEATS	BRONZE
5.	STEM	STAINLESS STEEL
6.	HANDWHEEL	CAST IRON

DIMENSIONS

SIZE	A	B(Closed)	C	Kg	Cv	Kv	K
50	178	350	203	18	309	7.29	0.15
65	190	360	228	25	491	11.59	0.15
80	203	409	228	27	719	17.0	0.14
100	229	493	254	43	1302	30.7	0.14
150	267	648	305	79	3107	73.3	0.12
200	292	815	355	114	5643	133	0.12
250	330	930	457	178	9227	218	0.11
300	356	1090	558	270	13616	321	0.10

UNLESS OTHERWISE SPECIFIED: TOLERANCES: MACHINE + / - 0.25mm FABRICATION + / - 1.0 mm

DIMENSIONS IN MILLIMETRES

THIS DRAWING IS THE PROPERTY OF MECHANICAL ENGINEERING & CAD SERVICES (MECS) Pty Ltd & MUST NOT BE MANUFACTURED FROM,COPIED OR TRANSMITTED TO A THIRD PARTY WITHOUT THE PRIOR APPROVAL FROM MECHANICAL ENGINEERING & CAD SERVICES (MECS) Pty Ltd

MECS
Mechanical Engineering & CAD Services
11 Campbell Place WAGGA NSW 2650
Ph: - 0409 985 816
Email: nick@mecservices.com.au

THIRD ANGLE PROJECTION

WEIGHT: 0 kg

CLIENT
RODDY ENGINEERING
14 Waratah St TUMUT NSW 2720
Ph: - 02 6947 4039
Email: roddyeng.com.au

TITLE: 250NB GATE VALVE TABLE F FLANGE DRILLED TABLE E

DWG NO. OEM-2609-SHL | A4

DRAWN N DE BRUYN | DATE 2/12/2025 | SCALE:1:20 | SHEET 1 OF 1