UNIMECH

UNIMECH GROUP, MALAYSIA

ARITA

A MEMBER OF UNIMECH GROUP, MALAYSIA

STAINLESS STEEL GATE VALVE FLANGED END 150 LB

(size 15mm~150mm)

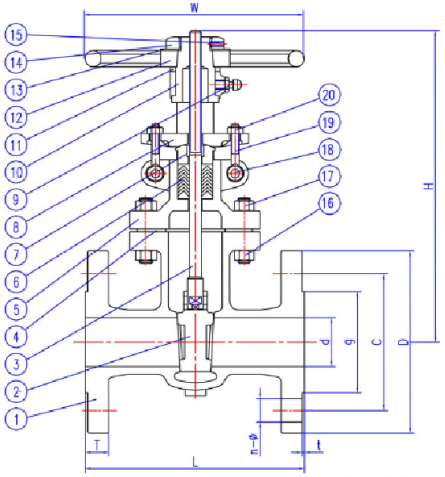

Features :

Pressure - Temperature Rating : ASME B16.34
Face to Face : ASME B16.10
Flange Connection Dimensions : ASME B16.5
Inspection and Test : API 598
Shell Test : 3.1 Mpa
High Pressure Sealing Test : 2.2 Mpa

Technical Data

Material

No.	PART	MATERIAL	
1	BODY	A351-CF8	A351-CF8M
2	DISC	A351-CF8	A351-CF8M
3	STEM	A276-304	A276-316
4	GASKET	PTFE	PTFE
5	BONNET	A351-CF8	A351-CF8M
6	PACKING	PTFE	PTFE
7	GLAND	A276-304	A276-316
8	GLAND FLANGE	A351-CF8	A351-CF8
9	GREASE SPOT	COPPER + NICKEL COATED	
10	YOKE NUT	A439-D2	A-439-D2

No.	PART	MATERIAL	
11	WASHER	A395-65-45-15	A395-65-45-15
12	HANDWHEEL	A395-65-45-15	A395-65-45-15
13	NAMEPLATE	A276-304	A276-304
14	HANDWHEEL NUT	A276-304	A276-304
15	SET SCREW	A276-304	A276-304
16	NUT	A194-8	A194-8
17	BONNET BOLT	A193-B8	A193-B8
18	HINGE PIN	A276-304	A276-304
19	EYEBOLT	A193-B8	A193-B8
20	NUT	A194-8	A194-8

Dimension in mm

SIZES DN	SIZES in.	d	L	D	C	g	T	t	n-Ø	H
15	1/2"	15	108	90	60.3	35	10	2	4-16	196
20	3/4"	20	117	100	69.9	43	10.9	2	4-16	207.5
25	1"	25	127	110	79.4	51	11.6	2	4-16	220
32	1.1/4"	32	165	115	88.9	63.5	13.2	2	4-16	276
40	1.1/2"	40	165	125	98.4	73	14.7	2	4-16	276
50	2"	50	178	150	120.7	92	16.3	2	4-19	327
65	2.1/2"	65	190	180	139.7	105	17.9	2	4-19	397.5
80	3"	80	203	190	152.4	127	19.5	2	4-19	438
100	4"	100	229	230	190.5	157	24.3	2	8-19	516
125	5"	125	254	255	215.9	186	24.3	2	8-22	673
150	6"	150	267	280	241.3	216	25.9	2	8-22	727

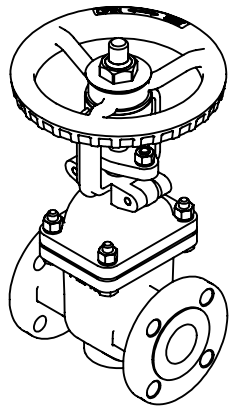

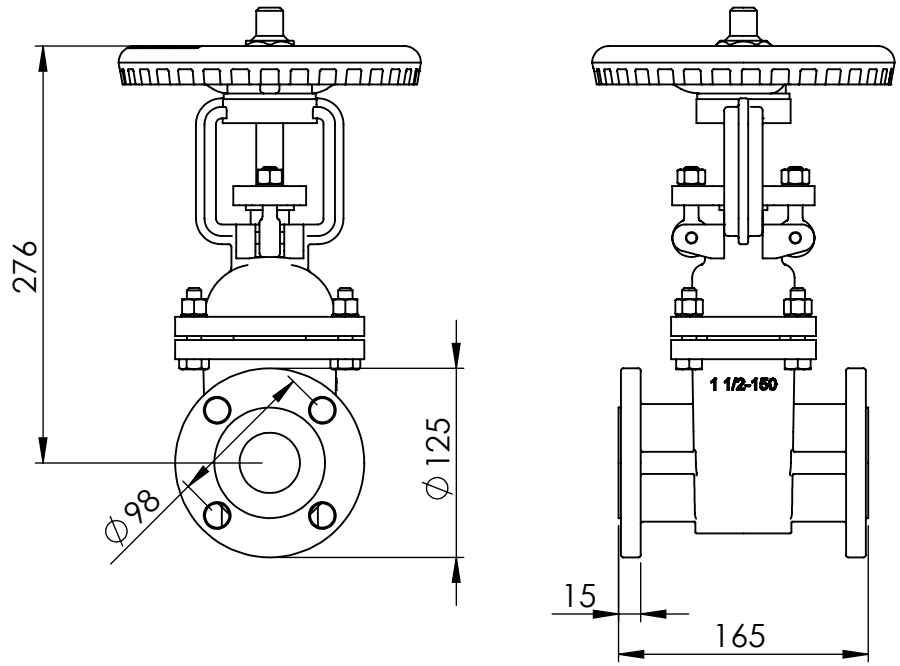

UNLESS OTHERWISE SPECIFIED: TOLERANCES: MACHINE + / - 0.25mm FABRICATION + / - 1.0 mm

DIMENSIONS IN MILLIMETRES

THIS DRAWING IS THE PROPERTY OF MECHANICAL ENGINEERING & CAD SERVICES (MECS) Pty Ltd & MUST NOT BE MANUFACTURED FROM,COPIED OR TRANSMITTED TO A THIRD PARTY WITHOUT THE PRIOR APPROVAL FROM MECHANICAL ENGINEERING & CAD SERVICES (MECS) Pty Ltd

MECS
Mechanical Engineering & CAD Services
11 Campbell Place WAGGA NSW 2650
Ph: - 0409 985 816
Email: nick@mecservices.com.au

THIRD ANGLE PROJECTION

WEIGHT: 15.9 kg

CLIENT

RODDY ENGINEERING
14 Waratah St TUMUT NSW 2720
Ph: - 02 6947 4039
Email: roddyeng.com.au

TITLE: 40NB ARITA GATE VALVE 150 Lb S/S

DWG NO. OEM-2631-SHL

A4

DRAWN N DE BRUYN DATE 2/03/2026 SCALE:1:5 SHEET 1 OF 1