80NB ANSI VALVE DRILLED JIS5K
FLANGES WERE ORIGINALLY 210 OD
MACININED BACK TO SUIT JIS5K FLANGE OD

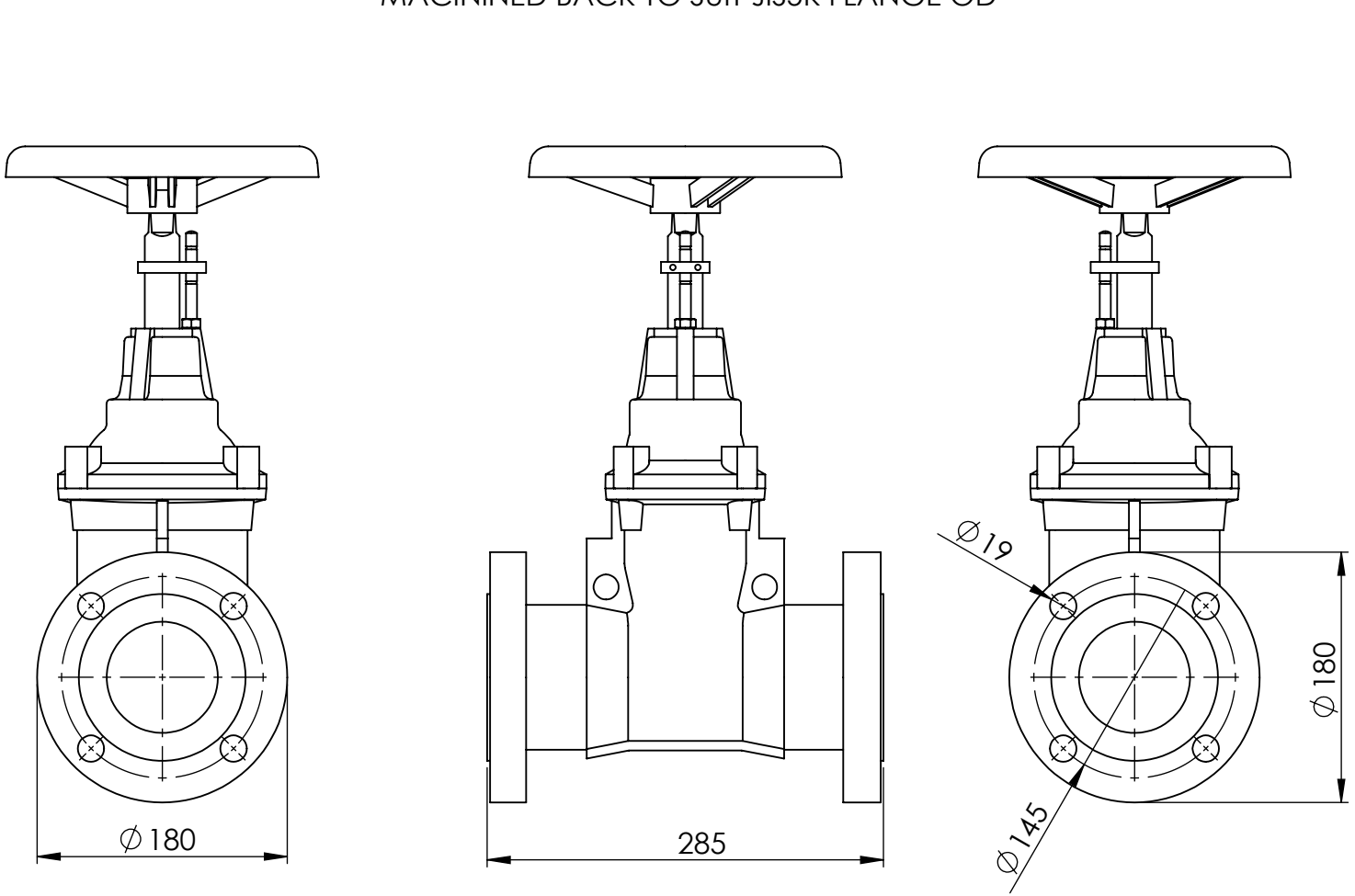

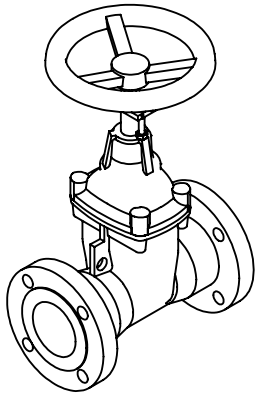

NOTE VALVE BODY NOT TO DIMENSION- PICTORIAL ONLY

UNLESS OTHERWISE SPECIFIED: TOLERANCES: MACHINE + / - 0.25mm FABRICATION + / - 1.0 mm

DIMENSIONS IN MILLIMETRES

THIS DRAWING IS THE PROPERTY OF MECHANICAL ENGINEERING & CAD SERVICES (MECS) Pty Ltd & MUST NOT BE MANUFACTURED FROM,COPIED OR TRANSMITTED TO A THIRD PARTY WITHOUT THE PRIOR APPROVAL FROM MECHANICAL ENGINEERING & CAD SERVICES (MECS) Pty Ltd

MECS
Mechanical Engineering & CAD Services
11 Campbell Place WAGGA NSW 2650
Ph: - 0409 985 816
Email: nick@mecservices.com.au

THIRD ANGLE PROJECTION

WEIGHT: 29 kg

CLIENT

RODDY ENGINEERING
14 Waratah St TUMUT NSW 2720
Ph: - 02 6947 4039
Email: roddyeng.com.au

TITLE: 80NB VALVE 2839

DWG NO.	OEM-2839-SHL	REV	A4
DRAWN N DE BRUYN	DATE 28/11/2024	SCALE:1:5	SHEET 1 OF 1