COMPONENTS AND MATERIAL LISTS

NO	PART NAME	MATERIAL	QTY
1	BODY	ASTM A351 CF8M	
2	DISC	ASTM A351 CF8M	
3	HINGE	ASTM A351 CF8M	
4	DISC NUT	ASTM A194 8M	
5	PIN	ASTM A276 316	
6	YOKE	ASTM A351 CF8M	
7	YOKE BOLT	ASTM A193 B8M	
8	GASKET	SS316+GRAPHITE	
9	COVER	ASTM A351 CF8M	
10	COVER NUT	ASTM A194 8M	
11	COVER BOLT	ASTM A193 B8M	
12	EYE BOLT	CARBON STEEL+ZN	

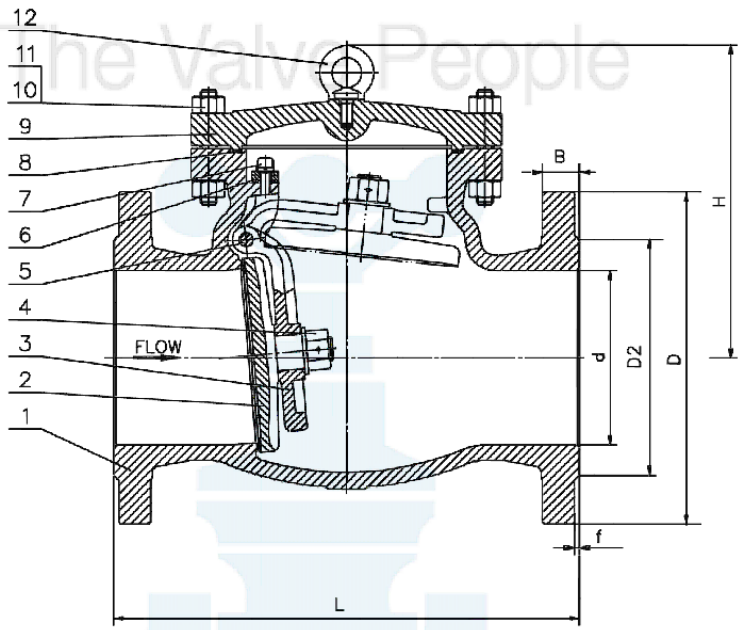

NOTE: FLANGE UNDRILLED

RELEVANT STANDRAD

DESIGN & MFT	API 6D
PRE-TEMP. RATING	ASME B16.34
F-F DIMENSION	ASME B16.10
INSPECT & TEST	API 598
ENDS CONNECTION	FLANGED R.F
WAFER DIMENSION	ASME B16.5
MARKING	MSS-SP-25
PAINTING	MANUFACTURE STD

TESTING UNIT: MPa

PRESS. RATING	CL300
WATER SHELL	7.7
WATER SEAT	5.7
AIR TEST	N.A
TEMPERATURE	-100~500℃

DIMENSIONS [UNIT: MM]

DN	SIZE	d	L	D	D2	B	f	H
DN150	6"	152	445	320	215.9	37	2	310

FIG: 7032SSUD ANSI 300

DRAWED BY: Mr.WILLIAM
CHECKED BY: Mr.ALEXANDER
APPROVED BY: Mr.THOMAS
DATE: JUL.19TH, 2018

SALES DRAWING
API 6D BOLTED COVER SWING CHECK VALVE
BODY: A351 CF8M TRIM: SS316
ANSI CL300 RF X ANSI CL300 RF

JOHN VALVES PTY LTD / DWG NO.H44H-CL300

CHECK VALVE PICTORIAL ONLY

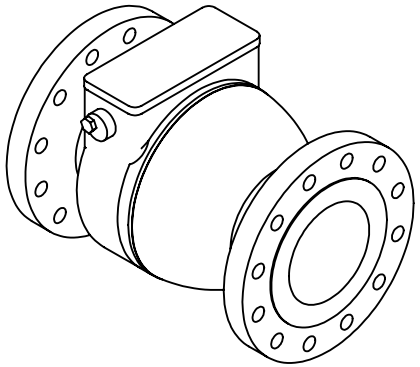

UNLESS OTHERWISE SPECIFIED: TOLERANCES: MACHINE + / - 0.25mm FABRICATION + / - 1.0 mm

DIMENSIONS IN MILLIMETRES

THIS DRAWING IS THE PROPERTY OF MECHANICAL ENGINEERING & CAD SERVICES (MECS) Pty Ltd & MUST NOT BE MANUFACTURED FROM,COPIED OR TRANSMITTED TO A THIRD PARTY WITHOUT THE PRIOR APPROVAL FROM MECHANICAL ENGINEERING & CAD SERVICES (MECS) Pty Ltd

MECS
Mechanical Engineering & CAD Services
11 Campbell Place WAGGA NSW 2650
Ph: - 0409 985 816
Email: nick@mecservices.com.au

THIRD ANGLE PROJECTION

WEIGHT: 12929.26 kg

CLIENT
RODDY ENGINEERING
14 Waratah St TUMUT NSW 2720
Ph: - 02 6947 4039
Email: roddyeng.com.au

TITLE: 150NB NON RETURN VALVE

DWG NO. OEM-2902A-SHL | A4

DRAWN N DE BRUYN | DATE 9/01/2025 | SCALE:1:10 | SHEET 1 OF 2

CHECK VALVE PICTORIAL ONLY

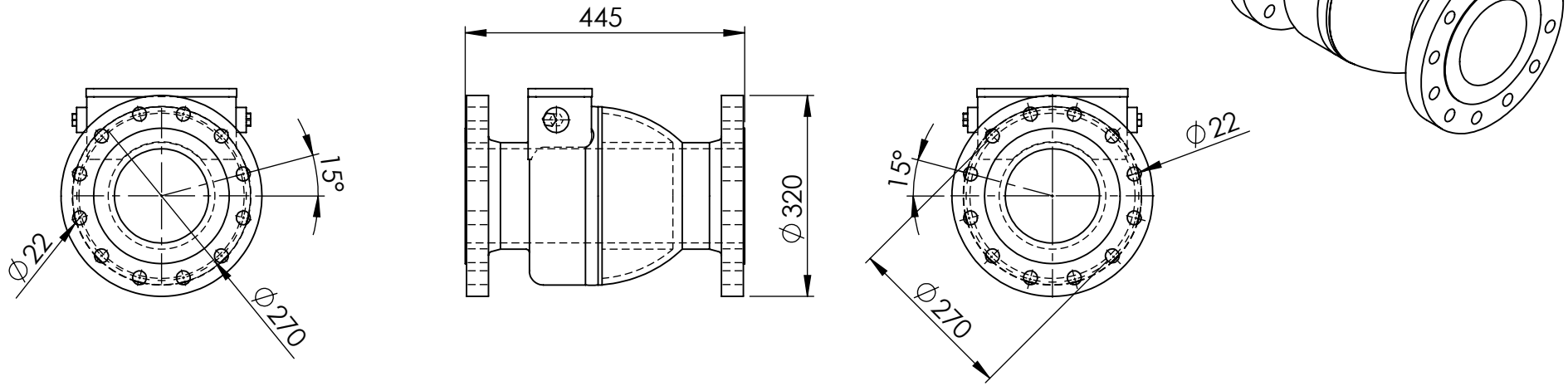

MATERIAL:- Material <not specified>

UNLESS OTHERWISE SPECIFIED: TOLERANCES: MACHINE + / - 0.25mm FABRICATION + / - 1.0 mm

DIMENSIONS IN MILLIMETRES

THIS DRAWING IS THE PROPERTY OF MECHANICAL ENGINEERING & CAD SERVICES (MECS) Pty Ltd & MUST NOT BE MANUFACTURED FROM,COPIED OR TRANSMITTED TO A THIRD PARTY WITHOUT THE PRIOR APPROVAL FROM MECHANICAL ENGINEERING & CAD SERVICES (MECS) Pty Ltd

MECS
Mechanical Engineering & CAD Services
11 Campbell Place WAGGA NSW 2650
Ph: - 0409 985 816
Email: nick@mecservices.com.au

THIRD ANGLE PROJECTION

WEIGHT: 12929.26 kg

CLIENT

RODDY ENGINEERING
14 Waratah St TUMUT NSW 2720
Ph: - 02 6947 4039
Email: roddyeng.com.au

TITLE: 150NB NON RETURN VALVE

DWG NO. OEM-2902A-SHL

A4

DRAWN N DE BRUYN DATE 9/01/2025 SCALE:1:10 SHEET 2 OF 2