COMPONENTS AND MATERIAL LISTS

NO.	PART NAME	MATERIAL	Q'TY
1	BODY	ASTM A182 F316	
2	DISC	ASTM A182 F316	
3	STEM	ASTM A182 F316	
4	GASKET	SS316+GRAPHITE	
5	BONNET	ASTM A182 F316	
6	HEX. BOLT	ASTM A193 B8M	
7	PACKING	FLEXIBLE GRAPHITE	
8	PACKING GLAND	ASTM A182 F316	
9	GLAND FLANGE	ASTM A182 F316	
10	GLAND NUT	ASTM A193 B8M	
11	GLAND EYEBOLT	ASTM A194 8M	
12	YOKE NUT	A276 410	
13	WASHER	C.S+ZN	
14	NUT	CARBON STEEL	
15	HANDWHEEL	A197	

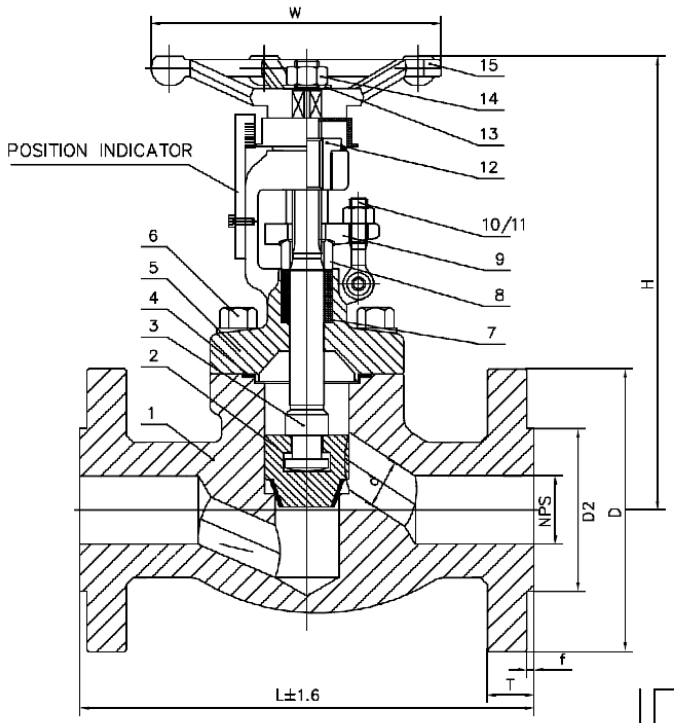

RELEVANT STANDRAD

DESIGN & MFT	API 602
PRE-TEMP. RATING	ASME B16.34
F-F DIMENSION	ANSI B16.10
INSPECT & TEST	API 598
ENDS CONNECTION	FLANGED R.F
FLANGED DIMENSION	ASME B16.5
MARKING	MSS-SP-25
PAINTING	MANUFACTURE STD

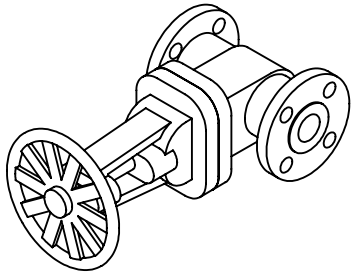

TESTING UNIT: MPa

PRESS. RATING	CL300
WATER SHELL	7.5
WATER SEAT	5.5
AIR TEST	0.6

DIMENSIONS [UNIT: MM]

DN	SIZE	L	D	D2	T	f	H	W
DN40	1 1/2"	229	155	73.0	20.5	2	252	145

NOTE: FLANGE UNDRILLED

FIG. NO. GLV-CL300-SS316-R.F-HW

DRAWED BY: Mr.WILLIAM
CHECKED BY: Mr.ALEXANDER
APPROVED BY: Mr.THOMAS
DATE: JUN.23TH, 2018

SALES DRAWING
DN40 OS&Y RISING STEM B.B GLOBE VALVE
BODY: A182 F316 TRIM: A182 F316

JOHN VALVES PTY LTD / DWG NO.J41Y-ANSI300

REFER SHEET 2 FOR DRILLING DETAILS

MATERIAL:- 316 STAINLESS STEEL

UNLESS OTHERWISE SPECIFIED: TOLERANCES: MACHINE + / - 0.25mm FABRICATION + / - 1.0 mm

DIMENSIONS IN MILLIMETRES

THIS DRAWING IS THE PROPERTY OF MECHANICAL ENGINEERING & CAD SERVICES (MECS) Pty Ltd & MUST NOT BE MANUFACTURED FROM,COPIED OR TRANSMITTED TO A THIRD PARTY WITHOUT THE PRIOR APPROVAL FROM MECHANICAL ENGINEERING & CAD SERVICES (MECS) Pty Ltd

MECS
Mechanical Engineering & CAD Services
11 Campbell Place WAGGA NSW 2650
Ph: - 0409 985 816
Email: nick@mecservices.com.au

THIRD ANGLE PROJECTION

WEIGHT: 33 kg

CLIENT

RODDY ENGINEERING
14 Waratah St TUMUT NSW 2720
Ph: - 02 6947 4039
Email: roddyeng.com.au

TITLE: 40NB VALVE 2904 NO BOLT HOLES

DWG NO. OEM-2904-SHL-1 REV A4

DRAWN N DE BRUYN DATE 17/05/2024 SCALE:1:10 SHEET 1 OF 2

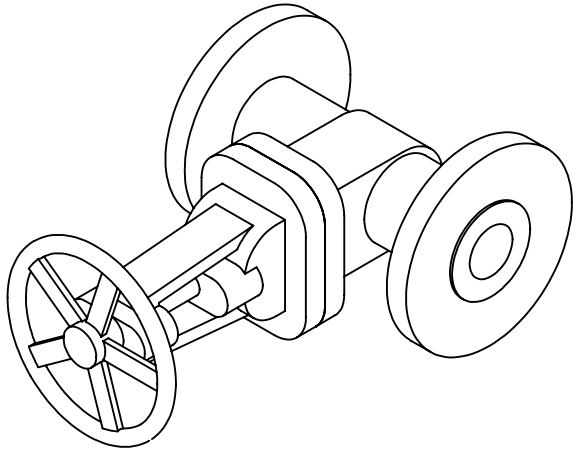

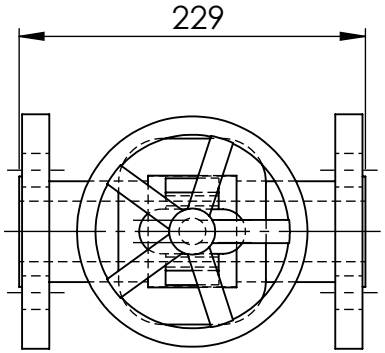

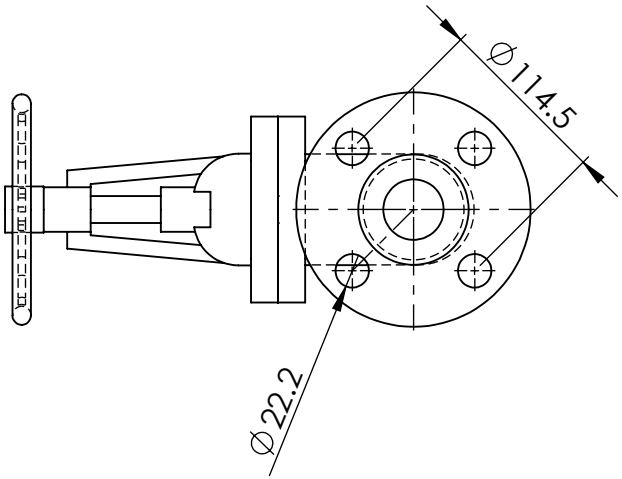

UNLESS OTHERWISE SPECIFIED: TOLERANCES: MACHINE + / - 0.25mm FABRICATION + / - 1.0 mm

DIMENSIONS IN MILLIMETRES

THIS DRAWING IS THE PROPERTY OF MECHANICAL ENGINEERING & CAD SERVICES (MECS) Pty Ltd & MUST NOT BE MANUFACTURED FROM,COPIED OR TRANSMITTED TO A THIRD PARTY WITHOUT THE PRIOR APPROVAL FROM MECHANICAL ENGINEERING & CAD SERVICES (MECS) Pty Ltd

MECS
Mechanical Engineering & CAD Services
11 Campbell Place WAGGA NSW 2650
Ph: - 0409 985 816
Email: nick@mecservices.com.au

THIRD ANGLE PROJECTION

WEIGHT: 17 kg

CLIENT

RODDY ENGINEERING
14 Waratah St TUMUT NSW 2720
Ph: - 02 6947 4039
Email: roddyeng.com.au

TITLE: 40 NB VALVE 2904 DRILLED 300Lb ANSI

DWG NO.	REV	
OEM-2904-SHL		A4

DRAWN	DATE	SCALE	SHEET
N DE BRUYN	17/05/2024	1:5	2 OF 2