## COMPONENTS AND MATERIAL LISTS

| NO | PART NAME | MATERIAL | QTY |
|---|---|---|---|
| 1 | BODY | ASTM A182 F316 | |
| 2 | DISC | ASTM A182 F316 | |
| 3 | STEM | ASTM A182 F316 | |
| 4 | GASKET | SS316+GRAPHITE | |
| 5 | BONNET | ASTM A182 F316 | |
| 6 | HEX.BOLT | ASTM A193 B8M | |
| 7 | PACKING | FLEXIBLE GRAPHITE | |
| 8 | GLAND | ASTM A276 316 | |
| 9 | GLAND FLANGE | ASTM A182 F316 | |
| 10 | GLAND NUT | ASTM A194 8M | |
| 11 | GLAND EYEBOLT | ASTM A193 B8M | |
| 12 | YOKE NUT | ASTM A276 410 | |
| 13 | NAMEPLATE | SS304 | |
| 14 | NUT | CS | |
| 15 | WASHER | CS+ZN | |
| 16 | HAND WHEEL | ASTM A197 | |

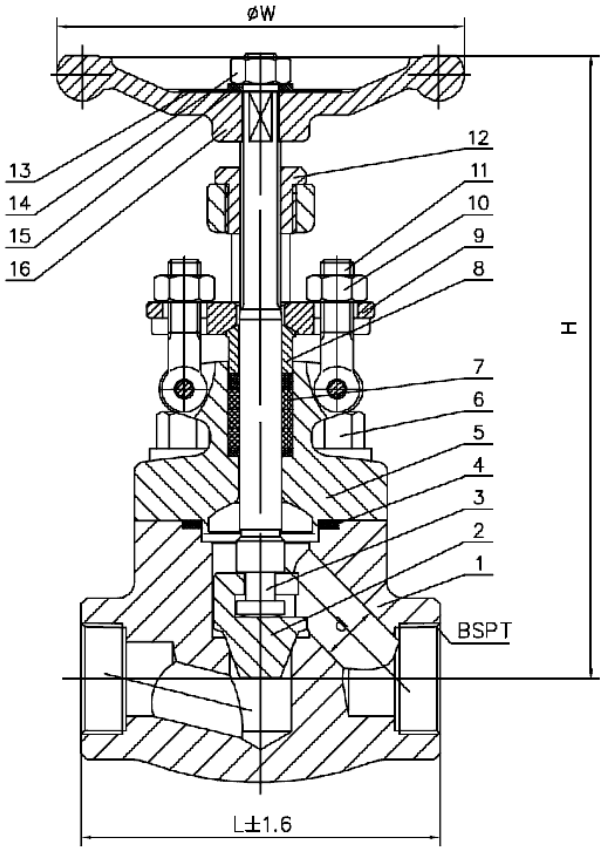


RELEVANT STANDRAD

| | |
|---|---|
| DESIGN & MFT | API 602 |
| PRE-TEMP. RATING | ASME B16.34 |
| F-F DIMENSION | ANSI B16.10 |
| INSPECT & TEST | API 598 |
| ENDS CONNECTION | SCREWED BSPT |
| THREAD DIMENSION | ISO 7-1 |
| MARKING | MSS-SP-25 |
| PAINTING | MANUFACTURE STD |

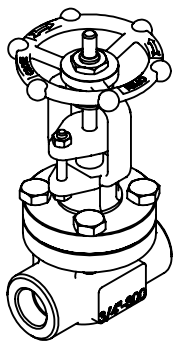

TESTING UNIT: MPa

| | |
|---|---|
| PRESS. RATING | CL800 |
| WATER SHELL | 21.4 |
| WATER SEAT | 15.4 |
| AIR TEST | 0.6 |

DIMENSIONS [UNIT: MM]

| DN | SIZE | L | BSPT | d | H | W |
|---|---|---|---|---|---|---|
| DN20 | 3/4" | 92 | DN20 | 13.5 | 172 | 95 |

**FIG. NO.: GLV-CL800-SS316-BSPT-HW**

DRAWED BY: Mr.WILLIAM
CHECKED BY: Mr.ALEXANDER
APPROVED BY: Mr.THOMAS
DATE: JUN.23TH, 2018

SALES DRAWING
DN20 OS&Y R.S B.B GLOBE VALVE
BODY: A182 F316 TRIM: A182 F316

JOHN VALVES PTY LTD / DWG NO.J11-CL800

**MATERIAL:-** 316 STAINLESS STEEL

UNLESS OTHERWISE SPECIFIED: TOLERANCES: MACHINE + / - 0.25mm FABRICATION + / - 1.0 mm

DIMENSIONS IN MILLIMETRES

THIS DRAWING IS THE PROPERTY OF MECHANICAL ENGINEERING & CAD SERVICES (MECS) Pty Ltd & MUST NOT BE MANUFACTURED FROM,COPIED OR TRANSMITTED TO A THIRD PARTY WITHOUT THE PRIOR APPROVAL FROM MECHANICAL ENGINEERING & CAD SERVICES (MECS) Pty Ltd

MECS
Mechanical Engineering & CAD Services
11 Campbell Place WAGGA NSW 2650
Ph: - 0409 985 816
Email: nick@mecservices.com.au

THIRD ANGLE PROJECTION

WEIGHT: 4.5788 kg

CLIENT

RODDY ENGINEERING
14 Waratah St TUMUT NSW 2720
Ph: - 02 6947 4039
Email: roddyeng.com.au

TITLE:

# 3/4" BSPT GLV-CL800-316 VALVE

DWG NO. OEM-2926-SHL

A4

DRAWN N DE BRUYN DATE 10/02/2026 SCALE:1:5 SHEET 1 OF 1