COMPONENTS AND MATERIAL LISTS

NO	PART NAME	MATERIAL	QTY
1	BODY	ASTM A182 F316	
2	DISC	ASTM A182 F316	
3	STEM	ASTM A182 F316	
4	GASKET	SS316+GRAPHITE	
5	BONNET	ASTM A182 F316	
6	HEX.BOLT	ASTM A193 B8M	
7	PACKING	FLEXIBLE GRAPHITE	
8	GLAND	ASTM A276 316	
9	GLAND FLANGE	ASTM A182 F316	
10	GLAND NUT	ASTM A194 8M	
11	GLAND EYEBOLT	ASTM A193 B8M	
12	YOKE NUT	ASTM A276 410	
13	NAMEPLATE	SS304	
14	NUT	CS	
15	WASHER	CS+ZN	
16	HAND WHEEL	ASTM A197	

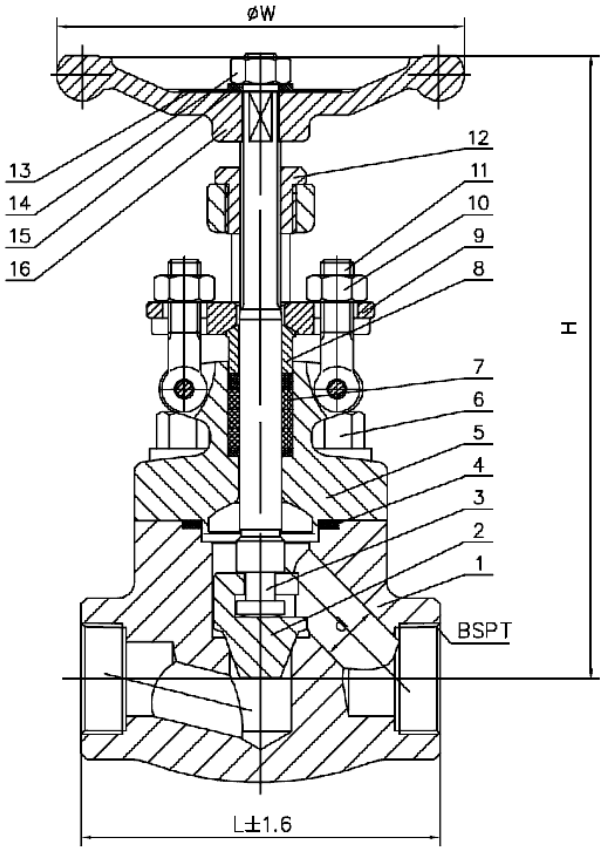

RELEVANT STANDRAD

DESIGN & MFT	API 602
PRE-TEMP. RATING	ASME B16.34
F-F DIMENSION	ANSI B16.10
INSPECT & TEST	API 598
ENDS CONNECTION	SCREWED BSPT
THREAD DIMENSION	ISO 7-1
MARKING	MSS-SP-25
PAINTING	MANUFACTURE STD

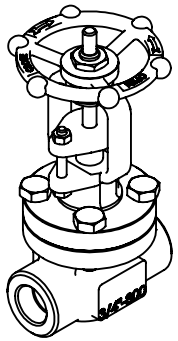

TESTING UNIT: MPa

PRESS. RATING	CL800
WATER SHELL	21.4
WATER SEAT	15.4
AIR TEST	0.6

DIMENSIONS [UNIT: MM]

DN	SIZE	L	BSPT	d	H	W
DN20	3/4"	92	DN20	13.5	172	95

FIG. NO.: GLV-CL800-SS316-BSPT-HW

DRAWED BY: Mr.WILLIAM
CHECKED BY: Mr.ALEXANDER
APPROVED BY: Mr.THOMAS
DATE: JUN.23TH, 2018

SALES DRAWING
DN20 OS&Y R.S B.B GLOBE VALVE
BODY: A182 F316 TRIM: A182 F316

JOHN VALVES PTY LTD / DWG NO.J11-CL800

MATERIAL:- 316 STAINLESS STEEL

UNLESS OTHERWISE SPECIFIED: TOLERANCES: MACHINE + / - 0.25mm FABRICATION + / - 1.0 mm

DIMENSIONS IN MILLIMETRES

THIS DRAWING IS THE PROPERTY OF MECHANICAL ENGINEERING & CAD SERVICES (MECS) Pty Ltd & MUST NOT BE MANUFACTURED FROM,COPIED OR TRANSMITTED TO A THIRD PARTY WITHOUT THE PRIOR APPROVAL FROM MECHANICAL ENGINEERING & CAD SERVICES (MECS) Pty Ltd

MECS
Mechanical Engineering & CAD Services
11 Campbell Place WAGGA NSW 2650
Ph: - 0409 985 816
Email: nick@mecservices.com.au

THIRD ANGLE PROJECTION

WEIGHT: 4.5788 kg

CLIENT

RODDY ENGINEERING
14 Waratah St TUMUT NSW 2720
Ph: - 02 6947 4039
Email: roddyeng.com.au

TITLE:

3/4" BSPT GLV-CL800-316 VALVE

DWG NO. OEM-2928-SHL

A4

DRAWN N DE BRUYN DATE 10/02/2026 SCALE:1:5 SHEET 1 OF 1