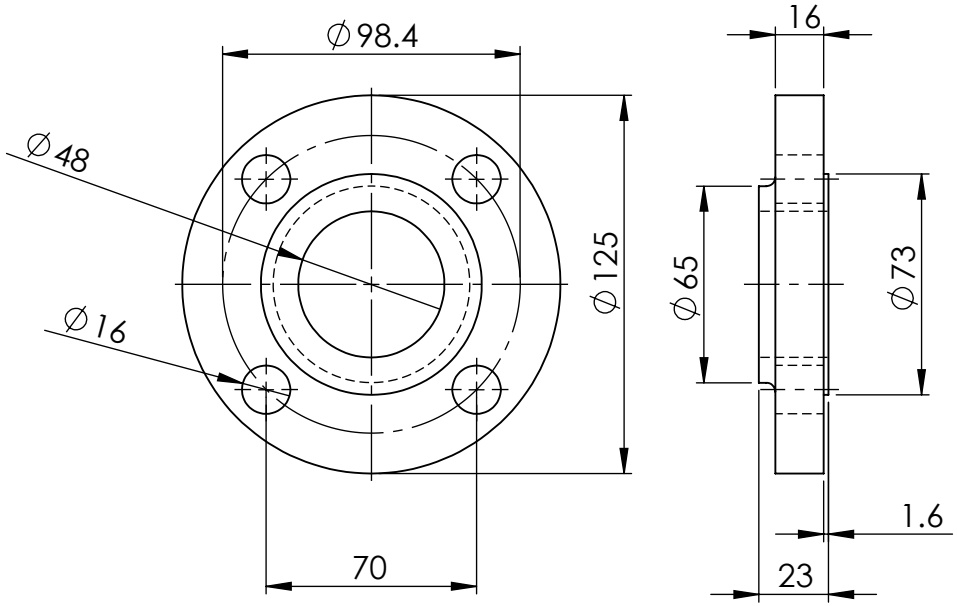

FLANGE DIMENSIONS BEFORE MACHINING

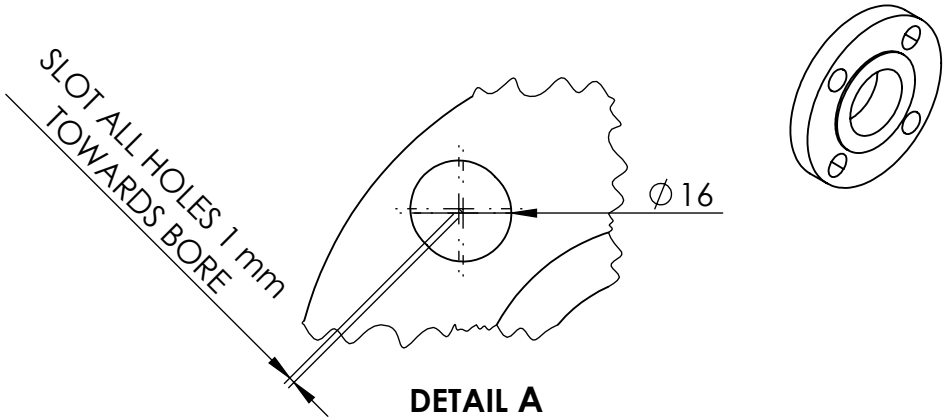

DETAIL A
SCALE 2 : 2.5

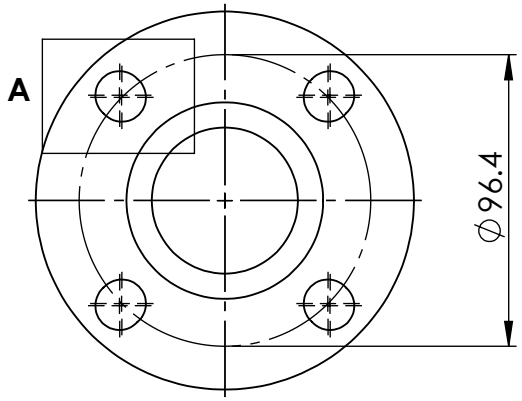

FLANGE DIMENSIONS AFTER MACHINING

MATERIAL:- 316L STAINLESS STEEL

UNLESS OTHERWISE SPECIFIED: TOLERANCES: MACHINE + / - 0.25mm FABRICATION + / - 1.0 mm

DIMENSIONS IN MILLIMETRES

THIS DRAWING IS THE PROPERTY OF MECHANICAL ENGINEERING & CAD SERVICES (MECS) Pty Ltd & MUST NOT BE MANUFACTURED FROM,COPIED OR TRANSMITTED TO A THIRD PARTY WITHOUT THE PRIOR APPROVAL FROM MECHANICAL ENGINEERING & CAD SERVICES (MECS) Pty Ltd

MECS
Mechanical Engineering & CAD Services
11 Campbell Place WAGGA NSW 2650
Ph: - 0409 985 816
Email: nick@mecservices.com.au

THIRD ANGLE PROJECTION

WEIGHT: 1.3 kg

CLIENT

RODDY ENGINEERING
14 Waratah St TUMUT NSW 2720
Ph: - 02 6947 4039
Email: roddyeng.com.au

TITLE: 40NB FLANGE ANSI 150 LB SLIP ON HOLES SLOTTED 316L S/S

DWG NO.	REV	
OEM-40-150-SO-M-316L		A4

DRAWN	DATE	SCALE	SHEET
N DE BRUYN	11/10/2024	SCALE:1:2.5	SHEET 1 OF 1