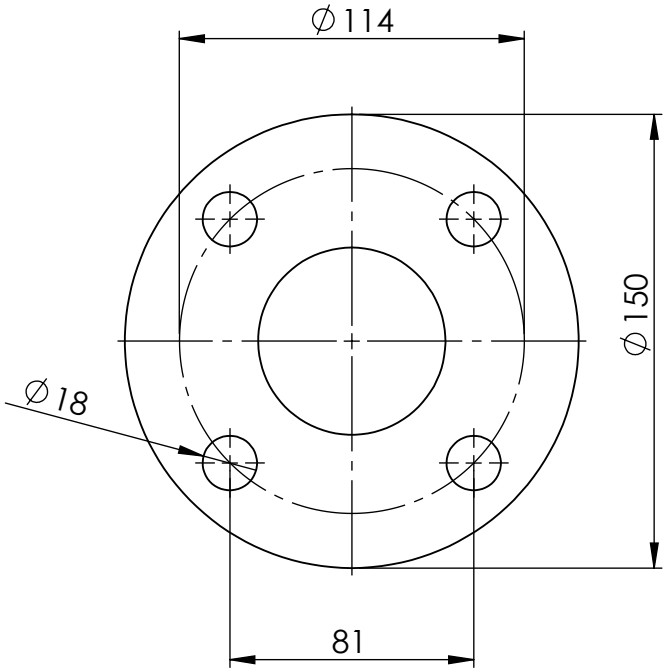


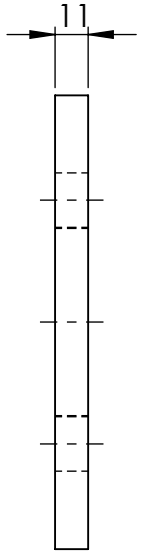


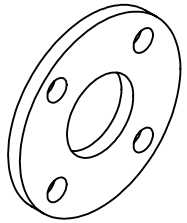

**MATERIAL:-** 316L STAINLESS STEEL

UNLESS OTHERWISE SPECIFIED: TOLERANCES: MACHINE + / - 0.25mm FABRICATION + / - 1.0 mm

DIMENSIONS IN MILLIMETRES

THIS DRAWING IS THE PROPERTY OF MECHANICAL ENGINEERING & CAD SERVICES (MECS) Pty Ltd & MUST NOT BE MANUFACTURED FROM,COPIED OR TRANSMITTED TO A THIRD PARTY WITHOUT THE PRIOR APPROVAL FROM MECHANICAL ENGINEERING & CAD SERVICES (MECS) Pty Ltd

MECS
**Mechanical Engineering & CAD Services**
11 Campbell Place WAGGA NSW 2650
Ph: - 0409 985 816
Email: nick@mecservices.com.au

THIRD ANGLE PROJECTION

WEIGHT: 1 kg

CLIENT

RODDY ENGINEERING
14 Waratah St TUMUT NSW 2720
Ph: - 02 6947 4039
Email: roddyeng.com.au

TITLE:

# 50NB FLANGE AS4087 PN16 SLIP ON 316L S/S

| DWG NO. | REV | |
|---|---|---|
| OEM-50-PN16-SO-316L | | A4 |

| DRAWN | DATE | SCALE | SHEET |
|---|---|---|---|
| N DE BRUYN | 2/05/2024 | 1:2.5 | 1 OF 1 |