DIMENSIONS IN MILLIMETRES

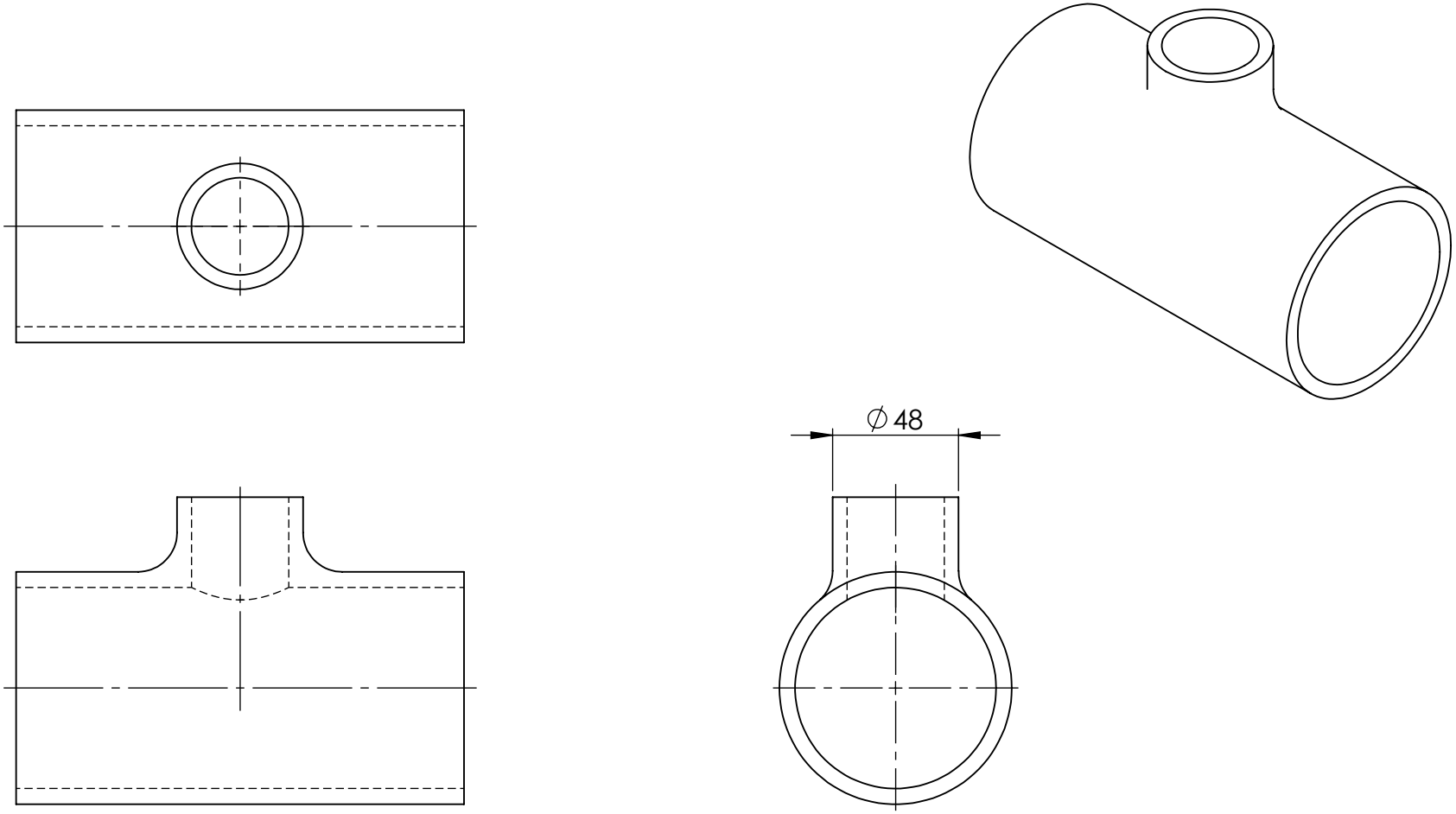

MATERIAL:- 316L STAINLESS STEEL

UNLESS OTHERWISE SPECIFIED: TOLERANCES: MACHINE + / - 0.25mm FABRICATION + / - 1.0 mm

THIS DRAWING IS THE PROPERTY OF MECHANICAL ENGINEERING & CAD SERVICES (MECS) Pty Ltd & MUST NOT BE MANUFACTURED FROM,COPIED OR TRANSMITTED TO A THIRD PARTY WITHOUT THE PRIOR APPROVAL FROM MECHANICAL ENGINEERING & CAD SERVICES (MECS) Pty Ltd

THIRD ANGLE PROJECTION

WEIGHT: 2 Kg

MECS
Mechanical Engineering & CAD Services
11 Campbell Place WAGGA NSW 2650
Ph: - 0409 985 816
Email: nick@mecservices.com.au

TITLE: 80NB x 40NB BUTT WELD REDUCING TEE SHED 40 316L S/S

DWG NO. OEM-80x40-T-40-316L REV

A4

DRAWN N DE BRUYN DATE 27/03/2024 SCALE:1:2.5 SHEET 1 OF 1