DIMENSIONS IN MILLIMETRES

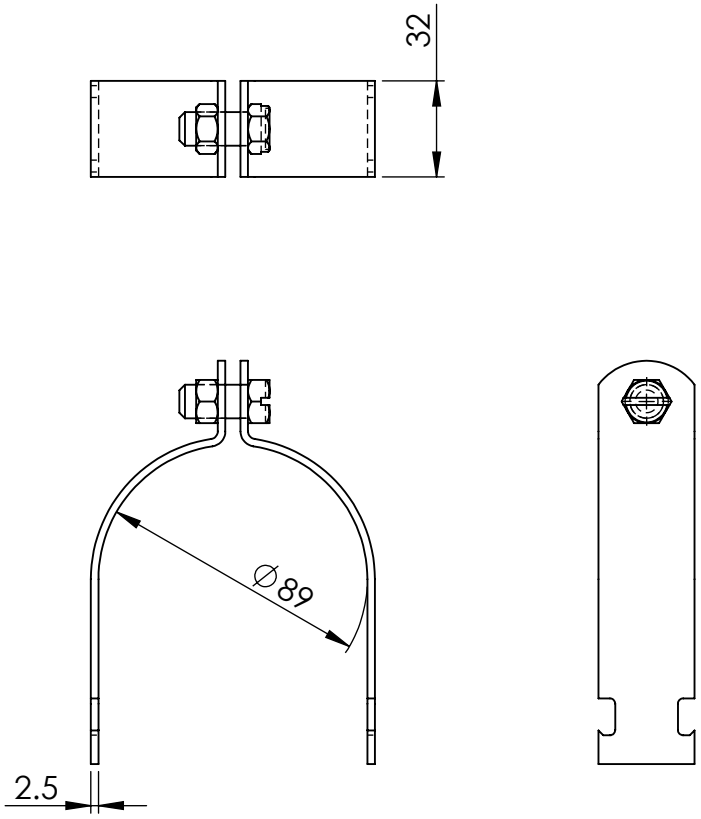

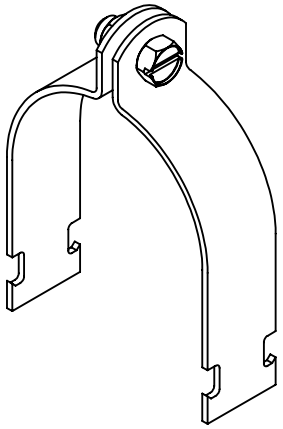

EZY STRUT PART # - E5-89S

MATERIAL:- 304 STAINLESS STEEL

UNLESS OTHERWISE SPECIFIED: TOLERANCES: MACHINE + / - 0.25mm FABRICATION + / - 1.0 mm

THIS DRAWING IS THE PROPERTY OF MECHANICAL ENGINEERING & CAD SERVICES (MECS) Pty Ltd & MUST NOT BE MANUFACTURED FROM,COPIED OR TRANSMITTED TO A THIRD PARTY WITHOUT THE PRIOR APPROVAL FROM MECHANICAL ENGINEERING & CAD SERVICES (MECS) Pty Ltd

THIRD ANGLE PROJECTION

WEIGHT: Kg

MECS
Mechanical Engineering & CAD Services
11 Campbell Place WAGGA NSW 2650
Ph: - 0409 985 816
Email: nick@mecservices.com.au

TITLE: 80NB PIPE- 2 PIECE CHANNEL CLAMP

DWG NO. OEM-ES-89S REV A4

DRAWN N DE BRUYN DATE 4/12/2025 SCALE:1:2.5 SHEET 1 OF 1